Hardware Design

SIM300C_HD_V2.03

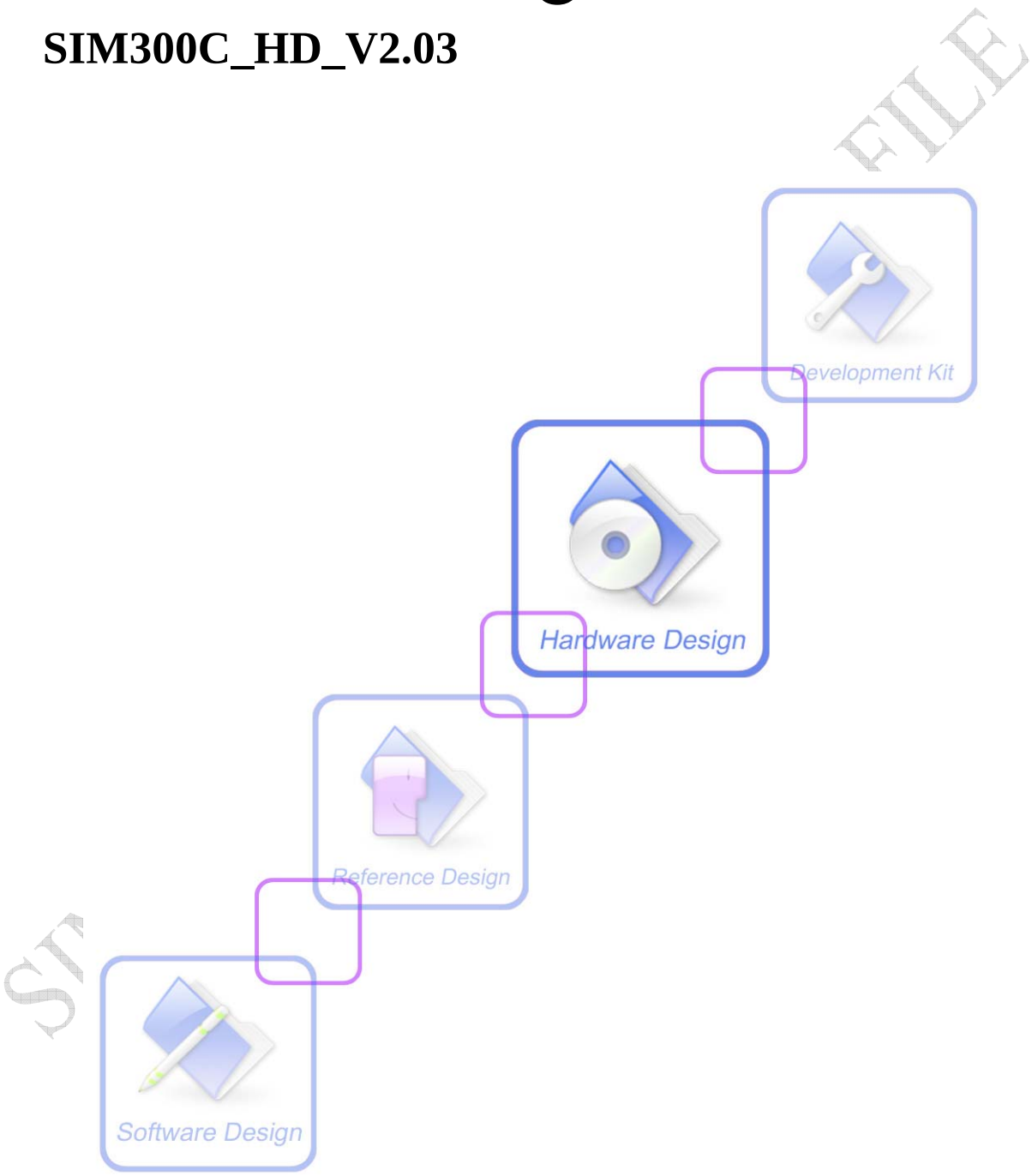

Document Title:	SIM300C Hardware Design
Version:	2.03
Date:	2007-01-11
Status:	Release
Document Control ID:	SIM300C_HD_V2.03

SIMCOM CONFIDENTIAL FILE

General Notes

Simcom offers this information as a service to its customers, to support application and engineering efforts that use the products designed by Simcom. The information provided is based upon requirements specifically provided to Simcom by the customers. Simcom has not undertaken any independent search for additional relevant information, including any information that may be in the customer's possession. Furthermore, system validation of this product designed by Simcom within a larger electronic system remains the responsibility of the customer or the customer's system integrator. All specifications supplied herein are subject to change.

Copyright

This document contains proprietary technical information which is the property of SIMCOM Limited., copying of this document and giving it to others and the using or communication of the contents thereof, are forbidden without express authority. Offenders are liable to the payment of damages. All rights reserved in the event of grant of a patent or the registration of a utility model or design. All specification supplied herein are subject to change without notice at any time.

Copyright © SIMCOM Limited. 2007

Contents

Contents 3
Version history 7
1 Introduction 8
1.1 Related documents 8
1.2 Terms and abbreviations 9
2 Product concept 12
2.1 SIM300C key features at a glance 13
3 Application interface 15
3.1 SIM300C pin description 15
3.2 Operating modes 17
3.3 Power supply 19
3.3.1 Power supply pins on the DIP connector 19
3.3.2 Minimizing power losses 20
3.3.3 Monitoring power supply 20
3.4 Power up and power down scenarios 20
3.4.1 Turn on SIM300C 20
3.4.2 Turn off SIM300C 23
3.4.3 Restart SIM300C by the PWRKEY pin 25
3.5 Charging interface 25
3.5.1 Battery pack characteristics 26
3.5.2 Recommended battery pack 27
3.5.3 Implemented charging technique 27
3.5.4 Operating modes during charging 28
3.5.5 Charger requirements 29
3.6 Power saving 30
3.6.1 Minimum functionality mode 30
3.6.2 Sleep mode (slow clocking mode) 30
3.6.3 Wake up SIM300C from SLEEP mode 31
3.7 Summary of state transitions (except SLEEP mode) 31
3.8 RTC backup 32
3.9 Serial interfaces 35
3.9.1 Function of serial port supporting 36
3.9.2 Software upgrade and serial port 37
3.10 Audio interfaces 39
3.10.1 Speaker interface configuration 40
3.10.2 Microphone interfaces configuration 41
3.10.3 Earphone interface configuration 41
3.10.4 Referenced electronic characteristic 42
3.11 Buzzer 43
3.12 SIM card interface 43

SIMCOM CONFIDENTIAL FILE

3.12.1 SIM card application 43
3.12.2 Design considerations for SIM card holder 45
3.13 LCD interface 48
3.14 ADC 48
3.15 Behaviors of the RI line (serial port interface only) 48
3.16 Network status indication LED lamp 49
3.17 General purpose input & output (GPIO) 50
4 Antenna interface 51
4.1 Antenna installation 51
4.1.1 Antenna connector 51
4.1.2 Antenna pad 51
4.2 Module RF output power 52
4.3 Module RF receive sensitivity 52
4.4 Module operating frequencies 52
5 Electrical, reliability and radio characteristics 53
5.1 Absolute maximum ratings 53
5.2 Operating temperatures 53
5.3 Power supply ratings 54
5.4 Current consumption 55
5.5 Electro-static discharge 56
6 Mechanics 57
6.1 Mechanical dimensions of SIM300C 57
6.2 Mounting SIM300C onto the application platform 57
6.3 DIP connector 57
6.3.1 Mechanical dimensions of the ASTRON 1590060-093 58
6.4 RF adapter cabling 59
6.5 PIN assignment of DIP connector of SIM300C 61

SIMCOM CONFIDENTIAL FILE

APPENDIXD – Tables and Figures

Table Index

TABLE 1: RELATED DOCUMENTS 8
TABLE 2: TERMS AND ABBREVIATIONS 9
TABLE 3: SIM300C KEY FEATURES 13
TABLE 4: CODING SCHEMES AND MAXIMUM NET DATA RATES OVER AIR INTERFACE 14
TABLE 5: DIP CONNECTOR PIN DESCRIPTION 15
TABLE 6: OVERVIEW OF OPERATING MODES 17
TABLE 7: AT COMMANDS USED IN ALARM MODE 22
TABLE 8: SPEC OF RECOMMENDED BATTERY PACK 27
TABLE 9: OPERATING MODES 29
TABLE 10: AT COMMAND USUALLY USED IN GHOST MODE 29
TABLE 11: SUMMARY OF STATE TRANSITIONS 31
TABLE 12: LOGIC LEVELS OF SERIAL PORT PINS 36
TABLE 13: AUDIO INTERFACE SIGNAL 39
TABLE 14: MIC INPUT CHARACTERISTICS 42
TABLE 15: AUDIO OUTPUT CHARACTERISTICS 42
TABLE 16: BUZZER OUTPUT CHARACTERISTICS 42
TABLE 17: SIGNAL OF SIM INTERFACE (DIP CONNECTOR) 44
TABLE 18: PIN DESCRIPTION (AMPHENOL SIM CARD HOLDER) 46
TABLE 19: PIN DESCRIPTION (MOLEX SIM CARD HOLDER) 47
TABLE 20: PIN DEFINE OF LCD INTERFACE 48
TABLE 21: ADC PIN OF SIM300C 48
TABLE 22: BEHAVIOURS OF THE RI LINE 48
TABLE 23: WORKING STATE OF NETWORK STATUS INDICATION LED PIN 50
TABLE 24: GPIO PINS OF SIM300C 50
TABLE 25: SIM300C CONDUCTED RF OUTPUT POWER 52
TABLE 26: SIM300C CONDUCTED RF RECEIVE SENSITIVITY 52
TABLE 27: SIM300C OPERATING FREQUENCIES 52
TABLE 28: ABSOLUTE MAXIMUM RATINGS 53
TABLE 29: SIM300C OPERATING TEMPERATURE 53
TABLE 30: SIM300C POWER SUPPLY RATINGS 54
TABLE 31: SIM300C CURRENT CONSUMPTION 55
TABLE 32: THE ESD ENDURE STATUE MEASURED TABLE (TEMPERATURE: 25℃, HUMIDITY:45%) 56
TABLE 33: CONNECTION DIAGRAMS 61

SIMCOM CONFIDENTIAL FILE

Figure Index

FIGURE 1: VBAT INPUT....19
FIGURE 2: VBAT VOLTAGE DROP DURING TRANSMIT BURST....19
FIGURE 3: TIMING OF TURN ON SYSTEM....21
FIGURE 4: TIMING OF TURN OFF SYSTEM....23
FIGURE 5: TIMING OF RESTART SYSTEM....25
FIGURE 6 : BATTERY CHARGER AND PACK....26
FIGURE 7: RTC SUPPLY FROM NON-CHARGEABLE BATTERY....32
FIGURE 8: RTC SUPPLY FROM RECHARGEABLE BATTERY....33
FIGURE 9: RTC SUPPLY FROM CAPACITOR....33
FIGURE 10: PANASONIC EECEMOE204A CHARGE CHARACTERISTIC....34
FIGURE 11: MAXELL TC614 CHARGE CHARACTERISTIC....34
FIGURE 12: SEIKO TS621 CHARGE CHARACTERISTIC....35
FIGURE 13: INTERFACE OF SERIAL PORT....36
FIGURE 14: INTERFACE OF SOFTWARE UPGRADE....38
FIGURE 15: INTERFACE OF SOFTWARE DEBUG....38
FIGURE 16: SPEAKER INTERFACE CONFIGURATION....40
FIGURE 17: SPEAKER INTERFACE WITH AMPLIFIER CONFIGURATION....40
FIGURE 18: MICROPHONE INTERFACE CONFIGURATION....41
FIGURE 19: EARPHONE INTERFACE CONFIGURATION....41
FIGURE 20: REFERENCE CIRCUIT FOR BUZZER....43
FIGURE 21: SIM INTERFACE REFERENCE CIRCUIT WITH 8 PINS SIM CARD HOLDER....44
FIGURE 22: SIM INTERFACE REFERENCE CIRCUIT WITH 6 PINS SIM CARD HOLDER....45
FIGURE 23: AMPHENOL C707 10M006 512 2 SIM CARD HOLDER....46
FIGURE 24: MOLEX 91228 SIM CARD HOLDER....47
FIGURE 25: SIM300C SERVICES AS RECEIVER....49
FIGURE 26: SIM300C SERVICES AS CALLER....49
FIGURE 27: REFERENCE CIRCUIT FOR NETWORK STATUS LED....50
FIGURE 28: MECHANICAL DIMENSIONS OF SIM300C（UNIT: MM）....57
FIGURE 29: ASTRON 1590060-093 DIP CONNECTOR PIN SIDE....58
FIGURE 30: ASTRON DIP CONNECTOR PHYSICAL PHOTO....58
FIGURE 31: MM9329-2700B....59
FIGURE 32: RF CONNECTOR MXTK....60
FIGURE 33: BOTTOM VIEW OF SIM300C....60

SIMCOM CONFIDENTIAL FILE

Version history

Date	Version	Description of change	Author
2005-12-27	01.00	Origin	anthony
2006-1-23	01.01	Update the photo of the module and the connector	
2006-2-8	01.02	Update the photo of the module mechanical dimensions	
2006-3-31	01.10	Update support Quad-Band Update support GPRS multi-slot class 8 Update Temperature range Update Autobauding Update Figure 3: Timing of turn on system ; Figure 4: Timing of turn off system; Figure 5: Timing of restart system Update RTC internal 10K resistor Update power supply ratings Update current consumption	Frank fu
2006-4-14	1.11	Update support Tri-Band Update Temperature range Update current consumption Remove dual serial ports support Description of 8 pins SIM card holder added and Update Figure 22,Figure 23 Description of STATUS pin as output port at table 24 Delete the VBAT_TEMP function	Frank fu
2006-10-09	2.01	Update Figure 16-19 Update connector pin name Add description about Debug port	song
2006-11-09	2.02	Modify audio output characteristics	song
2007-01-11	2.03	Modify the SIM300C key features Modify the overview of operating modes Modify the MIC input characteristics	song

1 Introduction

This document describes the hardware interface of the SIMCOM SIM300C module that connects to the specific application and the air interface. As SIM300C can be integrated with a wide range of applications, all functional components of SIM300C are described in great detail.

This document can help you quickly understand SIM300C interface specifications, electrical and mechanical details. With the help of this document and other SIM300C application notes, user guide, you can use SIM300C module to design and set-up mobile applications quickly.

1.1 Related documents

Table 1: Related documents

SN	Document name	Remark
[1]	SIM300C_ATC	SIM300C_ATC
[2]	ITU-T Draft new recommendation V.25ter:	Serial asynchronous automatic dialing and control
[3]	GSM 07.07:	Digital cellular telecommunications (Phase 2+); AT command set for GSM Mobile Equipment (ME)
[4]	GSM 07.05:	Digital cellular telecommunications (Phase 2+); Use of Data Terminal Equipment – Data Circuit terminating Equipment (DTE – DCE) interface for Short Message Service (SMS) and Cell Broadcast Service (CBS)
[5]	GSM 07.10:	Support GSM 07.10 multiplexing protocol
[6]	GSM 11.14:	Digital cellular telecommunications system (Phase 2+); Specification of the SIM Application Toolkit for the Subscriber Identity Module – Mobile Equipment (SIM – ME) interface
[7]	GSM 11.11:	Digital cellular telecommunications system (Phase 2+); Specification of the Subscriber Identity Module – Mobile Equipment (SIM – ME) interface
[8]	GSM 03.38:	Digital cellular telecommunications system (Phase 2+); Alphabets and language-specific information
[9]	GSM 11.10	Digital cellular telecommunications system (Phase 2)；Mobile Station (MS) conformance specification； Part 1: Conformance specification

1.2 Terms and abbreviations

Table 2: Terms and abbreviations

Abbreviation	Description
ADC	Analog-to-Digital Converter
ARP	Antenna Reference Point
ASIC	Application Specific Integrated Circuit
BER	Bit Error Rate
BTS	Base Transceiver Station
CHAP	Challenge Handshake Authentication Protocol
CS	Coding Scheme
CSD	Circuit Switched Data
CTS	Clear to Send
DAC	Digital-to-Analog Converter
DRX	Discontinuous Reception
DSP	Digital Signal Processor
DTE	Data Terminal Equipment (typically computer, terminal, printer)
DTR	Data Terminal Ready
DTX	Discontinuous Transmission
EFR	Enhanced Full Rate
EGSM	Enhanced GSM
EMC	Electromagnetic Compatibility
ESD	Electrostatic Discharge
ETS	European Telecommunication Standard
FCC	Federal Communications Commission (U.S.)
FDMA	Frequency Division Multiple Access
FR	Full Rate
GMSK	Gaussian Minimum Shift Keying
GPRS	General Packet Radio Service
GSM	Global Standard for Mobile Communications
HR	Half Rate
I/O	Input/Output
IC	Integrated Circuit
IMEI	International Mobile Equipment Identity
Inorm	Normal Current
Imax	Maximum Load Current
kbps	Kilo bits per second

LED	Light Emitting Diode
Abbreviation	**Description**
Li-Ion	Lithium-Ion
MO	Mobile Originated
MS	Mobile Station (GSM engine), also referred to as TE
MT	Mobile Terminated
PAP	Password Authentication Protocol
PBCCH	Packet Switched Broadcast Control Channel
PCB	Printed Circuit Board
PCS	Personal Communication System, also referred to as GSM 1900
PDU	Protocol Data Unit
PPP	Point-to-point protocol
RF	Radio Frequency
RMS	Root Mean Square (value)
RTC	Real Time Clock
Rx	Receive Direction
SIM	Subscriber Identification Module
SMS	Short Message Service
TDMA	Time Division Multiple Access
TE	Terminal Equipment, also referred to as DTE
TX	Transmit Direction
UART	Universal Asynchronous Receiver & Transmitter
URC	Unsolicited Result Code
USSD	Unstructured Supplementary Service Data
VSWR	Voltage Standing Wave Ratio
Vmax	Maximum Voltage Value
Vnorm	Normal Voltage Value
Vmin	Minimum Voltage Value
VIHmax	Maximum Input High Level Voltage Value
VIHmin	Minimum Input High Level Voltage Value
VILmax	Maximum Input Low Level Voltage Value
VILmin	Minimum Input Low Level Voltage Value
VImax	Absolute Maximum Input Voltage Value
VImin	Absolute Minimum Input Voltage Value
VOHmax	Maximum Output High Level Voltage Value
VOHmin	Minimum Output High Level Voltage Value
VOLmax	Maximum Output Low Level Voltage Value
VOLmin	Minimum Output Low Level Voltage Value

Phonebook abbreviations	
Abbreviation	**Description**
FD	SIM fix dialing phonebook
LD	SIM last dialing phonebook (list of numbers most recently dialed)
MC	Mobile Equipment list of unanswered MT calls (missed calls)
ON	SIM (or ME) own numbers (MSISDNs) list
RC	Mobile Equipment list of received calls
SM	SIM phonebook
M2M	Machine to Machine
NC	Not connect

SIMCOM CONFIDENTIAL F

2 Product concept

Designed for global market, SIM300C is a Tri-band GSM/GPRS engine that works on frequencies of EGSM 900 MHz, DCS 1800 MHz and PCS 1900 MHz.SIM300C features GPRS multi-slot class 10/ class8（optional） capability and support the GPRS coding schemes CS-1, CS-2, CS-3 and CS-4.

With a tiny configuration of 50mm x 33mm x 6.2mm, SIM300C can fit almost all the space requirement in your industrial application, such as M2M, and mobile data communication system etc. With the charge circuit integrated inside the SIM300C, it is very suitable for the battery power application.

The physical interface to the mobile application is made through a 60 pins DIP connector, which provides all hardware interfaces between the module and customers' boards except the RF antenna interface.

- The keypad and SPI display interface will give you the flexibility to develop customized applications.

- Serial port and Debug port can help you easily develop your applications.

- Two audio channels include two microphones inputs and two speaker outputs. This can be easily configured by AT command.

- Charge interface

The SIM300C provides RF antenna interface with two alternatives: antenna connector and antenna pad. The antenna connector is MURATA MM9329-2700. And customer's antenna can be soldered to the antenna pad.

The SIM300C is designed with power saving technique; the current consumption is as low as 2.5mA in SLEEP mode.

The SIM300C is integrated with the TCP/IP protocol, extended TCP/IP AT commands are developed for customers to use the TCP/IP protocol easily, which is very useful for those data transfer applications.

SIMCOM CONFIDENTIAL FILE

2.1 SIM300C key features at a glance

Table 3: SIM300C key features

Feature	Implementation
Power supply	Single supply voltage 3.4V – 4.5V
Power saving	Typical power consumption in SLEEP mode to 2.5mA (BS-PA-MFRMS =5)
Frequency bands	● SIM300C Tri-band: EGSM 900, DCS 1800, PCS 1900. The SIM300C can search the 3 frequency bands automatically. The frequency bands also can be set by AT command. ● Compliant to GSM Phase 2/2+
GSM class	Small MS
Transmit power	● Class 4 (2W) at EGSM900 ● Class 1 (1W) at DCS1800 and PCS 1900
GPRS connectivity	● GPRS multi-slot class 10 (default) ● GPRS multi-slot class 8 （option） ● GPRS mobile station class B
Temperature range	● Normal operation: -30°C to +70°C ● Restricted operation: -35°C to -30°C and +70 °C to +80°C ● Storage temperature -45°C to +85°C
DATA *GPRS:* *CSD:*	● GPRS data downlink transfer: max. 85.6 kbps ● GPRS data uplink transfer: max. 42.8 kbps ● Coding scheme: CS-1, CS-2, CS-3 and CS-4 ● SIM300C supports the protocols PAP (Password Authentication Protocol) usually used for PPP connections. ● The SIM300C integrates the TCP/IP protocol. ● Support Packet Switched Broadcast Control Channel (PBCCH) ● CSD transmission rates: 2.4, 4.8, 9.6, 14.4 kbps, non-transparent ● Unstructured Supplementary Services Data (USSD) support
SMS	● MT, MO, CB, Text and PDU mode ● SMS storage: SIM card
FAX	Group 3 Class 1
SIM interface	Support SIM card: 1.8V, 3V
External antenna	Connected via 50 Ohm antenna connector or antenna pad
Audio features	Speech codec modes: ● Half Rate (ETS 06.20) ● Full Rate (ETS 06.10) ● Enhanced Full Rate (ETS 06.50 / 06.60 / 06.80) ● Echo suppression

Serial interface and Debug interface	● Serial Port: Seven lines on Serial Port Interface ● Serial Port can be used for CSD FAX, GPRS service and send AT command to control module. ● Serial Port can use multiplexing function ● Autobauding supports baud rate from 1200 bps to 115200bps. ● Debug Port: Two lines on Serial Port Interface /TXD and /RXD ● Debug Port only used for debugging
Phonebook management	Support phonebook types: SM, FD, LD, RC, ON, MC.
SIM Application Toolkit	Support SAT class 3, GSM 11.14 Release 99
Real time clock	Implemented
Timer function	Programmable via AT command
Physical characteristics	Size: 50±0.15 x 33±0.15 x7.7±0.3mm (including application connector) 50±0.15 x 33±0.15 x 6.2±0.3mm (excluding application connector) Weight: 13.8g
Firmware upgrade	Firmware upgrade over serial interface

Table 4: Coding schemes and maximum net data rates over air interface

Coding scheme	1 Timeslot	2 Timeslot	4 Timeslot
CS-1:	9.05kbps	18.1kbps	36.2kbps
CS-2:	13.4kbps	26.8kbps	53.6kbps
CS-3:	15.6kbps	31.2kbps	62.4kbps
CS-4:	21.4kbps	42.8kbps	85.6kbps

SIMCOM CONFIDENTIAL

3 Application interface

SIM300C is equipped with a 60-pin 1.27mm pitch DIP connector that connects to the cellular application platform. Sub-interfaces included in this DIP connector are described in detail in following chapters:

- Power supply (*see Chapter 3.3*)
- Serial interfaces (*see Chapter 3.9*)
- Two analog audio interfaces (*see Chapter 3.10*)
- SIM interface (*see Chapter 3.12*)

Electrical and mechanical characteristics of the DIP connector are specified in *Chapter 6*. There we also include order information for mating connectors.

3.1 SIM300C pin description

Table 5: DIP connector pin description

Power Supply			
PIN NAME	I/O	DESCRIPTION	DC CHARACTERISTICS
VBAT		5 VBAT pins of the DIP connector are dedicated to connect the supply voltage. The power supply of SIM300C has to be a single voltage source of VBAT= 3.4V...4.5V. It must be able to provide sufficient current in a transmit burst which typically rises to 2A. may be about 0.1ms up to 3A in some times , these 5 pins are voltage input	Vmax= 4.5V Vmin=3.4V Vnorm=4.0V
VRTC	I/O	Current input for RTC when the battery is not supplied for the system. Current output for backup battery when the main battery is present and the backup battery is in low voltage state.	Vmax=2.0V Vmin=1.2V Vnorm=1.8V Inorm= 20uA
VDD_EXT	O	Supply 2.93V voltage for external circuit. By measuring this pin, user can judge whether the system is power on or off. When the voltage is low, the system is power off. Otherwise, the system is power on.	Vmax=3.0V Vmin=2.75V Vnorm=2.93V Imax=60mA
VCHG	I	Voltage input for the charge circuit; making the system detect the charger.	Vmax=5.25V Vmin=1.1 * VBAT

			Vnorm=5.1V
GND		Digital ground	
Power on or power off			
PIN NAME	I/O	DESCRIPTION	DC CHARACTERISTICS
PWRKEY	I	Voltage input for power on key. PWRKEY get a low level voltage for user to power on or power off the system. The user should keep pressing the key for a moment when power on or power off the system. Because the system need margin time assert the software.	VILmax=0.2*VBAT VIHmin=0.6*VBAT VImax=VBAT
Audio interfaces			
PIN NAME	I/O	DESCRIPTION	DC CHARACTERISTICS
MIC1P MIC1N	I	Positive and negative voice-band input	Audio DC Characteristics refer to chapter 3.10.4
MIC2P MIC2N	I	Auxiliary positive and negative voice-band input	
SPK1P SPK1N	O	Positive and negative voice-band output	
SPK2P SPK2N	O	Auxiliary positive and negative voice-band output	
BUZZER	O	Buzzer output	
AGND		Analog ground	
General purpose input/output			
PIN NAME	I/O	DESCRIPTION	DC CHARACTERISTICS
KBC0~KBC4	O	Keypads array	VILmin=0V VILmax=0.3 *VDD_EXT VIHmin=0.7*VDD_EXT VIHmax= VDD_EXT+0.3 VOLmin=GND VOLmax=0.2V VOHmin= VDD_EXT-0.2 VOHmax= VDD_EXT
KBR0~KBR4	I		
DISP_DATA	I/O	Display interface	
DISP_CLK	O		
DISP_CS	O		
DISP_D/C	O		
DISP_RST	O		
NETLIGHT	O	Network indicate light	
STATUS	O	Indicate work status	
GPIO0	I/O	Normal input/output port	
GPIO1	I/O		
Serial interface			
PIN NAME	I/O	DESCRIPTION	DC CHARACTERISTICS

DTR	I	Data terminal ready	VILmin=0V VILmax=0.3*VDD_EXT VIHmin=0.7*VDD_EXT VIHmax= VDD_EXT+0.3 VOLmin=GND VOLmax=0.2V VOHmin= VDD_EXT-0.2 VOHmax= VDD_EXT
RXD	I	Receive data	
TXD	O	Transmit data	
RTS	I	Request to send	
CTS	O	Clear to send	
RI	O	Ring indicator	
DCD	O	Data carrier detection	
Debug interface			
DBG_TXD	O	Serial interface for debugging and communication	
DBG_RXD	I		
SIM interface			
PIN NAME	I/O	DESCRIPTION	DC CHARACTERISTICS
SIM_VDD	O	Voltage supply for SIM card	The voltage can be select by software either 1.8V or 3V
SIM_DATA	I/O	SIM data output	VILmin=0V VILmax=0.3*SIM_VDD VIHmin=0.7*SIM_VDD VIHmax= SIM_VDD+0.3 VOLmin=GND VOLmax=0.2V VOHmin= SIM_VDD-0.2 VOHmax= SIM_VDD
SIM_CLK	O	SIM clock	
SIM_PRESENCE	I	SIM card detection	
SIM_RST	O	SIM reset	
AUXADC			
PIN NAME	I/O	DESCRIPTION	DC CHARACTERISTICS
ADC0	I	General purpose analog to digital converter.	Input voltage value 0 to 2.4V

3.2 Operating modes

The table below briefly summarizes the various operating modes referred to in the following chapters.

Table 6: Overview of operating modes

Mode	Function	
Normal operation	GSM/GPRS SLEEP	Module will automatically go into SLEEP mode if DTR is set to high level and there is no on air and no hardware interrupt (such as GPIO interrupt or data on serial port). In this case, the current consumption of module will reduce to the minimal level. During SLEEP mode, the module can still receive paging

		message and SMS from the system normally.
	GSM IDLE	Software is active. Module has registered to the GSM network, and the module is ready to send and receive.
	GSM TALK	Connection is going on between two subscribers. In this case, the power consumption depends on network settings such as DTX off/on, FR/EFR/HR, hopping sequences, antenna.
	GPRS STANDBY	Module is ready for GPRS data transfer, but no data is currently sent or received. In this case, power consumption depends on network settings and GPRS configuration
	GPRS DATA	There is GPRS data in transfer (PPP or TCP or UDP). In this case, power consumption is related with network settings (e.g. power control level), uplink / downlink data rates and GPRS configuration (e.g. used multi-slot settings).
POWER DOWN	Normal shutdown by sending the "AT+CPOWD=1" command or using the PWRKEY. The power management ASIC disconnects the power supply from the base band part of the module, only the power supply for the RTC is remained. Software is not active. The serial interfaces are not accessible. Operating voltage (connected to VBAT) remains applied.	
Minimum functionality mode (without remove power supply)	Use the "AT+CFUN" command can set the module to a minimum functionality mode without remove the power supply. In this case, the RF part of the module will not work or the SIM card is not accessible, or RF part and SIM card be closed all, the serial interfaces is still accessible. The power consumption in this case is very low.	
Alarm mode	RTC alert function launches this restricted operation while the module is in POWER DOWN mode. SIM300C will not be registered to GSM network and only parts of AT commands can be available.	
GHOST Mode (Charge-only mode)	GHOST mode means off and charging mode. In this mode, the module can not be registered to GSM network and only limited AT commands can be accessible, the following way will launch GHOST mode: ● From POWER DOWN mode: Connect charger to the module's VCHG pin and VBAT pin while SIM300C is power down. ● From Normal mode: Connect charger to the module's VCHG pin and VBAT pin, then power down the module by "AT+CPOWD＝1"	
Charge mode during normal operation	Start charging while the module is in normal mode including: SLEEP, IDLE, TALK, GPRS STANDBY and GPRS DATA)	

3.3 Power supply

The power supply of SIM300C is from a single voltage source of VBAT= 3.4V...4.5V. In some case, the ripple in a transmit burst may cause voltage drops when current consumption rises to typical peaks of 2A. So the power supply must be able to provide sufficient current up to 2A.

For the VBAT input, a local bypass capacitor is recommended. A capacitor (about 100μF, low ESR) is recommended. Multi-layer ceramic chip (MLCC) capacitors can provide the best combination of low ESR and small size but may not be cost effective. A lower cost choice may be a 100μF tantalum capacitor (low ESR) with a small (0.1μF to 1μF) ceramic in parallel, which is illustrated as following figure. And the capacitors should put as closer as possible to the SIM300C VBAT pins. The following figure is the recommended circuit.

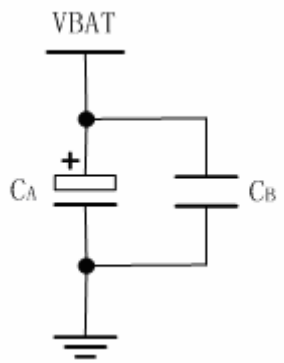

Figure 1: VBAT input

The following figure is the VBAT voltage ripple wave at the maximum power transmit phase, the test condition is VBAT=4.0V, VBAT maximum output current =2A, C_A=100μF tantalum capacitor (ESR=0.7Ω) and C_B=1μF.

Figure 2: VBAT voltage drop during transmit burst

3.3.1 Power supply pins on the DIP connector

Five VBAT pins of the DIP connector are dedicated to connect the supply voltage; Five GND pins are recommended for grounding. VRTC pin can be used to back up the RTC.

3.3.2 Minimizing power losses

Please pay special attention to the supply power when you are designing your applications. Please make sure that the input voltage will never drop below 3.4V even in a transmit burst during which the current consumption may rise up to 2A. If the power voltage drops below 3.4V, the module may be switched off. Using the DIP connector will be the best way to reduce the voltage drops. You should also remove the resistance from the power supply lines on the host board or from battery pack into account.

3.3.3 Monitoring power supply

To monitor the supply voltage, you can use the "AT+CBC" command which include three parameters: charge state, percent of battery capacity and voltage value (in mV). It returns charge state, the percent of battery capacity and actual value measured at VBAT and GND.

The voltage is continuously measured at intervals depending on the operating mode. The displayed voltage (in mV) is averaged over the last measuring period before the AT+CBC command was executed.

3.4 Power up and power down scenarios

3.4.1 Turn on SIM300C

SIM300C can be turned on by various ways, which are described in following chapters:

- Via PWRKEY pin: starts normal operating mode *(see chapter 3.4.1.1)*;
- Via RTC interrupt: starts ALARM modes *(see chapter 3.2.1.2)*

Note: The AT command must be set after the SIM300C is power on and Unsolicited Result Code "RDY" is received from the serial port. But if the SIM300 was set autobauding, the serial port received nothing, the AT command can be set after 2-3S from the SIM300C is power on. You can use AT+IPR=x;&W to set a fix baud rate and save the configuration to non-volatile flash memory. After the configuration was saved as fix baud rate, the Code "RDY" should be received from the serial port all the time when the SIM300C was power on. See Chapter AT+IPR in document [1].

3.4.1.1 Turn on SIM300C using the PWRKEY pin (Power on)

You can turn on the SIM300C by driving the PWRKEY to a low level voltage for period time. The power on scenario illustrates as following figure.

SIMCOM CONFIDENTIAL FILE

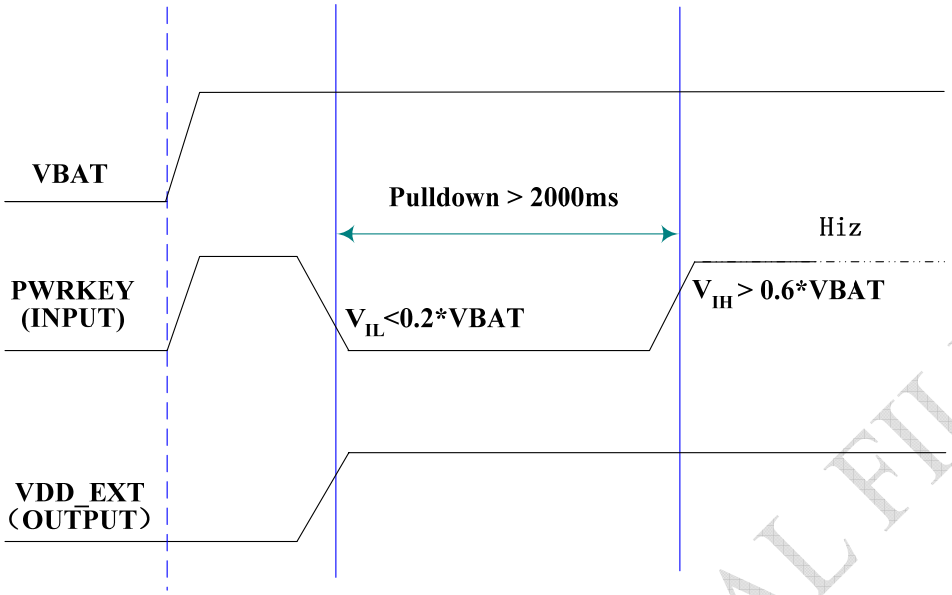

Figure 3: Timing of turn on system

When power on procedure complete, SIM300C will send out following result code to indicate the module is ready to operate, and STATUS pin will drive to 2.8V and keep this level when in work mode. If the SIM300C is configured to a fix baud rate, it will send out an Unsolicited Result Code (URC):

RDY

This result code does not appear when autobauding is active.

3.4.1.2 Turn on SIM300C using the RTC (Alarm mode)

Alarm mode is a power-on approach by using the RTC. The alert function of RTC makes the SIM300C wake up while it is power off. In alarm mode, SIM300C will not register to GSM network and the software protocol stack is closed. Thus the parts of AT commands related with SIM card and Protocol stack will not be accessible, and the others can be used as well as in normal mode.

Use the AT+CALARM command to set the alarm time. The RTC remains the alarm time if SIM300C was power down by “AT+CPOWD=1” or by PWRKEY pin. Once the alarm time expires and executed, SIM300C goes into the Alarm mode. In this case, if the SIM300C is configured to a fixed baud rate, it will send out an Unsolicited Result Code (URC):

RDY

ALARM MODE

This result code does not appear when autobauding is active.

During alarm mode, using AT+CFUN command to query the status of software protocol stack; it will return 0 which indicates that the protocol stack is closed. Then after 90s, SIM300C will power

SIMCOM CONFIDENTIAL FILE

down automatically. However, during alarm mode, if the software protocol is started by AT+CFUN=1 command, the process of automatic power down will not be available. In ALARM mode, driving the PWRKEY to a low level voltage for a period will cause SIM300C to power down (Please refer to the power down scenario in 3.4.2.1).

The table follow briefly summarizes the AT commands that are used usually during alarm mode, for details of the instructions refer to *document [1]*:

Table 7: AT commands used in Alarm mode

AT command	USE
AT+CALARM	Set alarm time
AT+CCLK	Set data and time of RTC
AT+CPOWD	Power down
AT+CFUN	Start or close the protocol stack

3.4.1.3 Turn on the SIM300C using the VCHG signal

As described in chapter 3.5, charger can be connected to the SIM300C's VCHG pin regardless of the module's operating mode.

If the charger is connected to the module's VCHG pin while the SIM300C is in POWER DOWN mode, it will go into the GHOST mode (Off and charging). In this mode, the module will not register to network, and only a few AT commands can work in this mode. For detailed information please refers to chapter 3.5.4.

When the SIM300C is powered on using the VCHG signal and configured to a fixed baud rate, it will send out a result code as following:

RDY
GHOST MODE
+CFUN: 0

This result code does not appear when autobauding is active.

In GHOST mode, by driving the PWRKEY to a low level voltage for period time (Please refer to the power on scenario in 3.4.1.1), the SIM300C will power up and go into charge mode (charging in normal mode), all operation and AT commands can be available. In this case, if the SIM300C is configured to a fixed baud rate, it will send out result code as following:

From GHOST MODE to NORMAL MODE

This result code does not appear when autobauding is active.

SIMCOM CONFIDENTIAL

3.4.2 Turn off SIM300C

Following procedure can be used to turn off the SIM300C:

- Normal power down procedure: Turn off SIM300C using the PWRKEY pin
- Normal power down procedure: Turn off SIM300C using AT command
- Under-voltage automatic shutdown: Take effect if Under-voltage is detected
- Over-temperature automatic shutdown: Take effect if Over-temperature is detected

3.4.2.1 Turn off SIM300C using the PWRKEY pin (Power down)

You can turn off the SIM300C by driving the PWRKEY to a low level voltage for period time. The power down scenario illustrates as following figure.

This procedure will let the module to log off from the network and allow the software to enter into a secure state and save data before completely disconnect the power supply.

Before the completion of the switching off procedure the module will send out result code:

NORMAL POWER DOWN

After this moment, the AT commands can't be executed. The module enters the POWER DOWN mode, only the RTC is still active. POWER DOWN can also be indicated by VDD_EXT pin, which is a low level voltage in this mode.

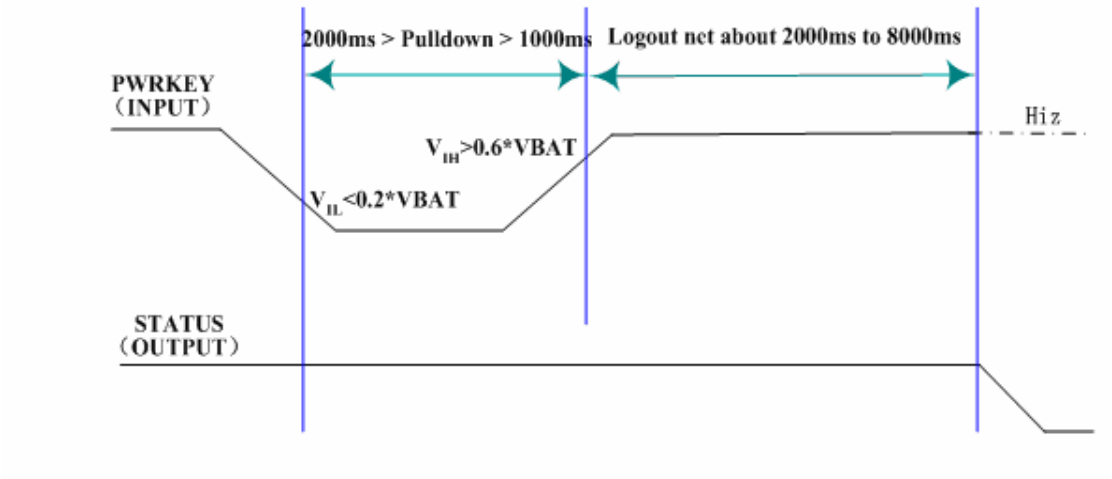

Figure 4: Timing of turn off system

3.4.2.2 Turn off SIM300C using AT command

You can use an AT command "AT+CPOWD=1" to turn off the module. This command will let the module to log off from the network and allow the software to enter into a secure state and save data before completely disconnect the power supply.

Before switching off the module will send out result code:

NORMAL POWER DOWN

SIMCOM CONFIDENTIAL FILE

After this moment, the AT commands can't be executed. The module enters the POWER DOWN mode, only the RTC is still active. POWER DOWN can also be indicated by VDD_EXT pin, which is a low level voltage in this mode.

Please refer to *document [1]* for detail about the AT command of "AT+CPOWD".

3.4.2.3 Under-voltage automatic shutdown

Software will constantly monitor the voltage applied on the VBAT, if the measured battery voltage is no more than 3.5V, the following URC will be presented:

POWER LOW WARNNING

If the measured battery voltage is no more than 3.4V, the following URC will be presented:

POWER LOW DOWN

After this moment, AT commands can't be executed. The module will log off from network and enter POWER DOWN mode, only the RTC is still active. POWER DOWN can also be indicated by VDD_EXT pin, which is a low level voltage in this mode.

3.4.2.4 Over-temperature automatic shutdown

Software will constantly monitor the temperature of the module, if the measured temperature ≥ 80℃, the following URC will be presented:

+CMTE:1

If the measured temperature ≤ -30℃, the following URC will be presented:

+CMTE:-1

The uncritical temperature range is -35℃ to 85℃. If the measured temperature ≥ 85℃ or ≤ -35℃, the module will be automatic shutdown soon.

If the measured temperature ≥ 85℃, the following URC will be presented:

+CMTE:2

If the measured temperature ≤ -35℃, the following URC will be presented:

+CMTE:-2

After this moment, the AT commands can't be executed. The module will log off from network and enter POWER DOWN mode, only the RTC is still active. POWER DOWN can also be indicated by VDD_EXT pin, which is a low level voltage in this mode.

To monitor the temperature, you can use the "AT+CMTE" command to measure the temperature

SIMCOM CONFIDENTIAL FILE

when the module is power on.

For details please refer to *document [1]*

3.4.3 Restart SIM300C by the PWRKEY pin

You can restart SIM300C by driving the PWRKEY to a low level voltage for period time, same as turn on SIM300C using the PWRKEY pin. Before restart the SIM300C, you need delay at least 500ms from detecting the STATUS low level on. The restart scenarios illustrates as the following figure.

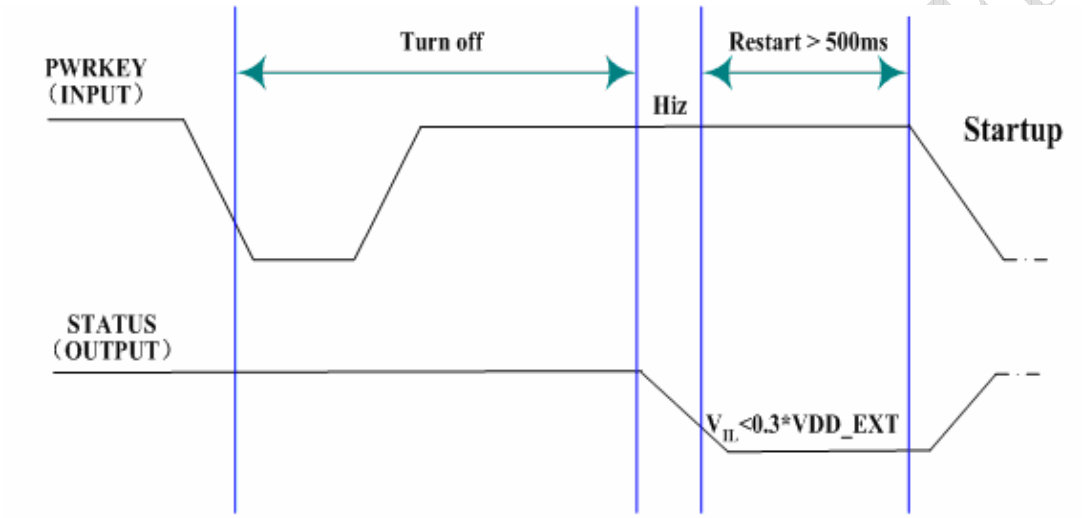

Figure 5: Timing of restart system

3.5 Charging interface

The SIM300C has integrated a charging circuit inside the module for Li-Ion batteries charging control, which make it very convenient for applications to manage their battery charging.
A common connection is shown in the following figure:

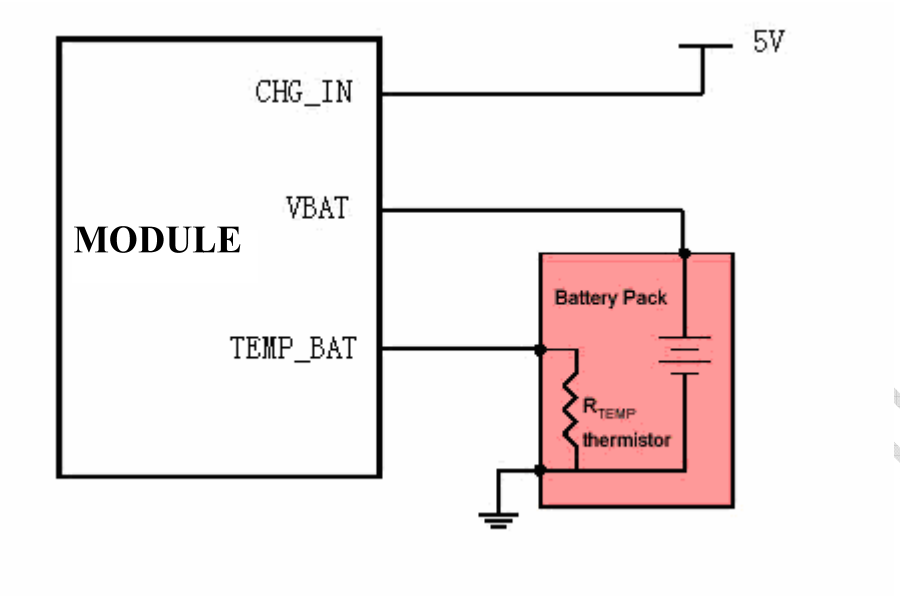

Figure 6 : Battery charger and pack

The TEMP_BAT function should be supported by the software in the module. It's a customization function. The R_{TEMP} is a NTC thermistor. We recommend to use NCP15XH103F03RC from MURATA. The impedance of the NTC thermistor is 10Kohm in 25℃. Please refer to the fore figure for the reference circuit.

3.5.1 Battery pack characteristics

The SIM300C has optimized the charging algorithm for the Li-Ion battery that meets the characteristics listed below. To use the SIM300C's charging algorithm properly, it is recommended that the battery pack you integrated into your application is compliant with these specifications. The battery pack compliant with these specifications is also important for the AT command "AT+CBC" to monitor the voltage of battery, or the "AT+CBC" may return incorrect battery capacity values.

- The maximum charging voltage of the Li-Ion battery pack is 4.2V and the recommended capacity is 580mAh.
- The pack should have a protection circuit to avoid overcharging, deep discharging and over-current. This circuit should be insensitive to pulsed current.
- The build-in circuit of the SIM300C's power management chipset monitors the supply voltage constantly. Once the Under-voltage is detected, the SIM300C will power down automatically. Under-voltage thresholds are specific to the battery pack.

SIMCOM CONFIDENTIAL

- The internal resistance of the battery and the protection circuit should be as low as possible. It is recommended not to exceed 200mΩ.
- The battery pack must be protected from reverse pole connection.

3.5.2 Recommended battery pack

Following is the spec of recommended battery pack:

Table 8: Spec of recommended battery pack

Product name & type	BYD, Li-Ion, 3.7V, 580mAh
To obtain more information Please contact :	BYD COMPANY LIMITED
Normal voltage	3.7V
Capacity	580mAh
Charge Voltage	4.200±0.049V
Max Charge Current	1.5C
Charge Method	CC / CV (Constant Current / Constant Voltage)
Max Discharge Current	1.5C (for continuous discharging mode)
Discharge Cut-off Voltage	2.75V/ cell
Internal resistance	Initial≤200mΩ After 400cycles ≤270mΩ

3.5.3 Implemented charging technique

The SIM300C includes the function for battery charging. There are two pins in the connector related with the battery charging function: VCHG and VBAT pins. The VCHG pin is driven by an external voltage, system can use this pin to detect a charger supply and provide most charging current through the SIM300C module to battery when charging is in fast charge state. The VBAT gives out charging current from the SIM300C module to external battery.

So it is very simple to implement charging technique, you need only connect the charger to the VCHG pin and connect the battery to the VBAT pin.
The SIM300C detect charger supply and the battery is present, battery charging will happen. If there is no charger supply or no battery present the charging will not be enabled.

Normally, there are three main states in whole charging procedure.

- DDLO charge and UVLO charge;
- Fast charge;
- Trickle charge;

DDLO charge and UVLO charge:

DDLO (deep discharge lock out) is the state of battery when its voltage under 2.4V. And UVLO (under voltage lock out) means the battery voltage less than 3.2V and more than 2.4V. The battery is not suitable for fast charge when its condition is DDLO or UVLO. The SIM300C provides a small constant current to the battery when the battery is between DDLO and UVLO. In DDLO charge, the SIM300C gives out 5mA current to the battery. And in UVLO charge, The SIM300C provide about 25mA current to the battery.

DDLO charge terminated when the battery voltage reaches 2.4V. UVLO charge terminated when the battery voltage is up to 3.2V. Both DDLO and UVLO charge are controlled by the SIM300C hardware only.

Fast charge:

If there is a charger supply and battery present and the battery is not in DDLO and UVLO, the SIM300C will enter fast charge state. Fast charge controlled by the software. Fast charge delivers a strong and constant current (about 450mA) through VBAT pin to the battery until battery voltage reach 4.2V.

Trickle charge:

After fast charging, the battery voltage near the whole battery capacity, trick charge begins .in this state, the SIM300C charge the battery under constant voltage.

3.5.4 Operating modes during charging

The battery can be charged during various operating mode. That means when the module is in Normal mode (SLEEP, IDLE, TALK, GPRS IDLE or GPRS DATA mode), charging can be in progress while the SIM300C remains operational (In this case the voltage supply should be sufficient). Here we name Charging in Normal mode as Charge mode.

If the charger is connected to the module's VCHG pin and the battery is connected to the VBAT pin while the SIM300C is in POWER DOWN mode, the SIM300C will go into the GHOST mode (Off and charging). The following table gives the difference between Charge mode and GHOST mode:

SIMCOM CONFIDENTIAL FILE

Table 9: operating modes

	How to activate mode	Features
Charge Mode	Connect charger to module's VCHG pin and connect battery to VBAT pin of module while the SIM300C is in Normal operating mode, including: IDLE, TALK mode; SLEEP mode etc;	● GSM remains operational and registered GSM network while charging is in progress; ● The serial interface is available in IDLE, TALK mode, the AT command set can be used fully in this case; In SLEEP mode, the serial interface is not available, once the serial port is connected and there is data in transfer. Then the SIM300C will exit the SLEEP mode.
GHOST Mode	Connect charger to module's VCHG pin while the SIM300C is in POWER DOWN mode.	● Battery can be charged when GSM engine is not registered to GSM network; ● Only a few AT commands are available as listed below.

Note: VBAT can not provide much more than 5mA current while sim300C module is during the DDLO charge state. In other words it is strongly recommended that VBAT should not be the main power supply in the application subsystem while sim300C module is during the DDLO charge state.

Table 10: AT Command usually used in GHOST mode

AT command	Function
AT+CALARM	Set alarm time
AT+CCLK	Set data and time of RTC
AT+CPOWD	Power down
AT+CBC	Indicated charge state and voltage
AT+CFUN	Start or close the protocol Set AT command **"AT+CFUN =1"**, module can be transferred from **GHOST** mode to **Charging in normal** mode, In **GHOST** mode , the default value is 0

3.5.5 Charger requirements

Following is the requirements of charger for the SIM300C.

- Simple transformer power plug
- Output voltage: 5.0V-5.25V

- Charging current limitation: 650mA
- A 10V peak voltage is allowed for maximum 1ms when charging current is switched off.
- A 1.6A peak current is allowed for maximum 1ms when charging current is switched on.

3.6 Power saving

There are two methods for the module to enter into low current consumption status. “AT+CFUN” is used to set module into minimum functionality mode and DTR hardware interface signal can be used to set system to be SLEEP mode (or slow clocking mode).

3.6.1 Minimum functionality mode

Minimum functionality mode reduces the functionality of the module to a minimum and, thus, minimizes the current consumption to the lowest level. This mode is set with the “AT+CFUN” command which provides the choice of the functionality levels <fun>=0, 1, 4

- 0: minimum functionality;
- 1: full functionality (default);
- 4: disable phone both transmit and receive RF circuits;

If SIM300C has been set to minimum functionality by “AT+CFUN=0”, then the RF function and SIM card function will be closed, in this case, the serial port is still accessible, but all AT commands correlative with RF function or SIM card function will not be accessible.

If SIM300C has been set by “AT+CFUN=4”, the RF function will be closed, the serial port is still active in this case but all AT commands correlative with RF function will not be accessible.

After SIM300C has been set by “AT+CFUN=0” or “AT+CFUN=4”, it can return to full functionality by “AT+CFUN=1”.

For detailed information about “AT+CFUN”, please refer to *document [1]*.

3.6.2 Sleep mode (slow clocking mode)

We can control SIM300C module to enter or exit the SLEEP mode in customer applications through DTR signal. Please note that the DTR pin is float inside SIM300C, so this pin must be in HIGH level to make the module enter SLEEP mode.

When DTR is in high level, there is no on air and no hardware interrupt (such as GPIO interrupt or data on serial port), SIM300C will enter SLEEP mode automatically. In this mode, SIM300C can still receive paging or SMS from network but the serial port is not accessible.

Note: For SIM300C, it requests to set AT command “AT+CSCLK=1” to enable the sleep mode;

SIMCOM CONFIDENTIAL FILE

the default value is 0, that can't make the module enter sleep mode, for more details please refer to our AT command list.

3.6.3 Wake up SIM300C from SLEEP mode

When SIM300C is in SLEEP mode, the following method can wake up the module.

- Enable DTR pin to wake up SIM300C.
  If DTR Pin is pulled down to a low level, this signal will wake up SIM300C from power saving mode. The serial port will be active after DTR change to low level about 20ms.
- Receive a voice or data call from network to wake up SIM300C.
- Receive a SMS from network to wake up SIM300C.
- RTC alarm expired to wake up SIM300C.

3.7 Summary of state transitions (except SLEEP mode)

Table 11: Summary of state transitions

Further mode Current mode	**POWER DOWN**	**Normal mode**	**Alarm mode**	**Ghost mode (Charge-only mode)**	**Charging in normal**
POWER DOWN		Use PWRKEY	Switch on from POWER DOWN mode by RTC	Connect charger to VCHG and connect battery to VBAT	No direct transition, but via "Ghost mode" or "Normal mode"
Normal mode	AT+CPOWD or use PWRKEY pin		Set alarm by "AT+CALARM" , and then switch off the module. When the timer expire, the module turn on and enter Alarm mode	Connect charger to VCHG and connect battery to VBAT, then switch off module by AT+CPOWD or using PWRKEY	Connect charger to VCHG pin of module and connect battery to VBAT pin of module
Alarm mode	Use PWRKEY pin or wait module switch off automatically	Use AT+CFUN		No transition	Use AT+CFUN let module enter Normal mode, then connect the charger to VCHG pin of module

Ghost mode (Charge-only mode)	Disconnect charger	No direct transition, but via "Charging in normal" mode	Set alarm by "AT+CALARM" , when the timer expire, module will enter Alarm mode		Turn on the module using PWRKEY OR SET AT Command "AT+CFUN=1"
Charging in normal	AT+CPOWD → "Ghost mode" , then disconnect charger	Disconnect the charger	No direct transition	Switch off module by AT+CPOWD or using PWRKEY	

3.8 RTC backup

The RTC (Real Time Clock) power supply of module can be provided by an external battery or a battery (rechargeable or non-chargeable) through the VRTC (PIN14) on the DIP connector. There is a 10K resistance has been integrated in SIM300C module used for restricting current. You need only a coin-cell battery or a super-cap to VRTC to backup power supply for RTC.

Note: The VRTC couldn't be designed to a NC pin in your circuit. You should connect the VRTC pin to a battery or a capacitor.

The following figures show various sample circuits for RTC backup.

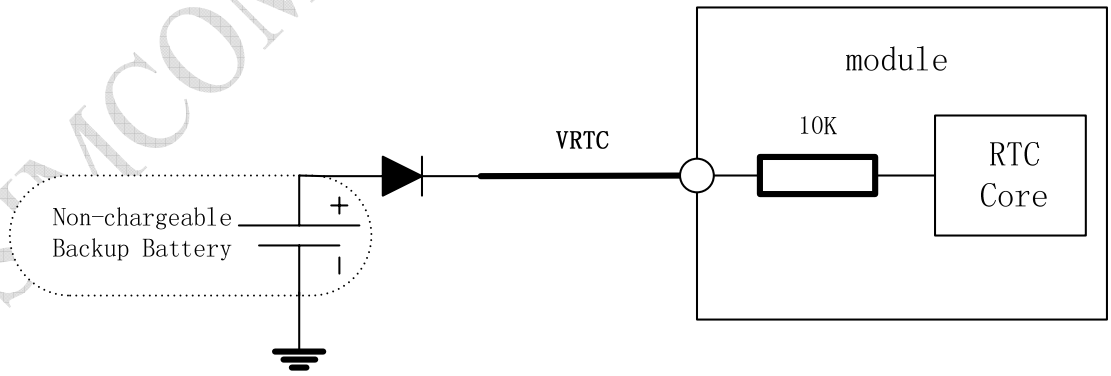

Figure 7: RTC supply from non-chargeable battery

SIMCOM CONFIDENTIAL

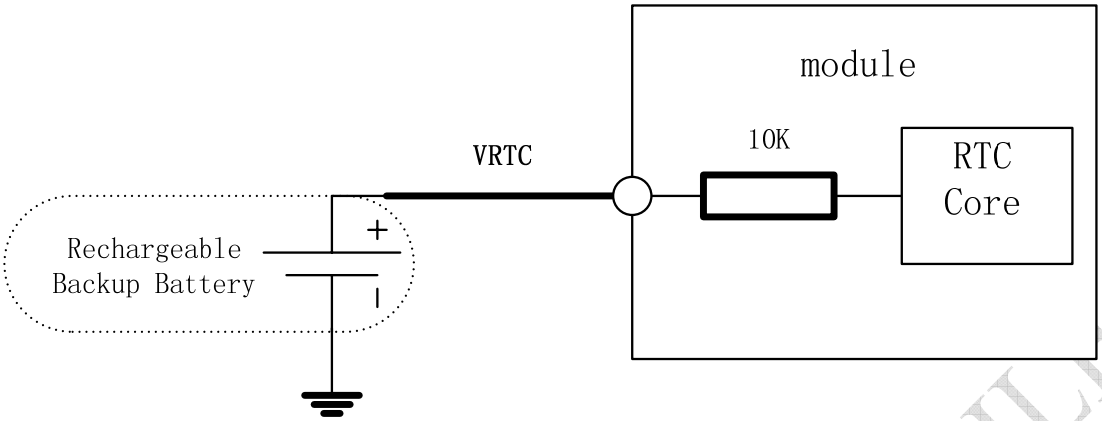

Figure 8: RTC supply from rechargeable battery

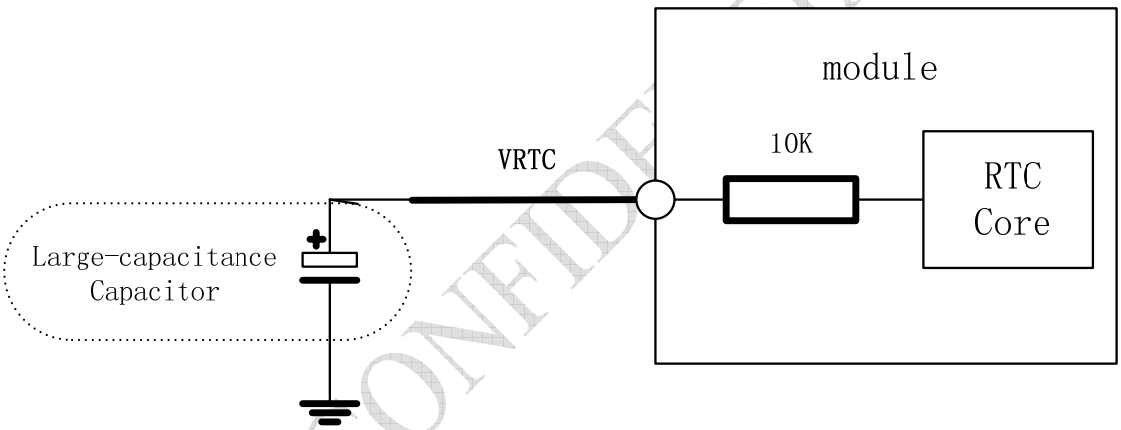

Figure 9: RTC supply from capacitor

- **Li-battery backup**

Rechargeable Lithium coin cells such as the TC614 from Maxell, or the TS621 from Seiko, are also small in size, but have higher capacity than the double layer capacitors resulting in longer backup times.

Typical charge curves for each cell type are shown in following figures. Note that the rechargeable Lithium type coin cells generally come pre-charged from the vendor.

SIMCOM CONFIDENTIAL FILE

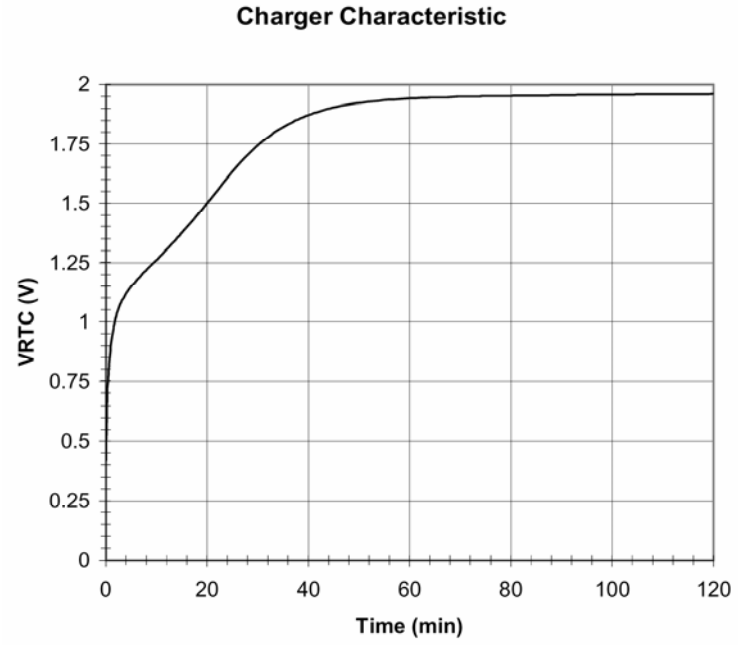

Figure 10: Panasonic EECEMOE204A Charge Characteristic

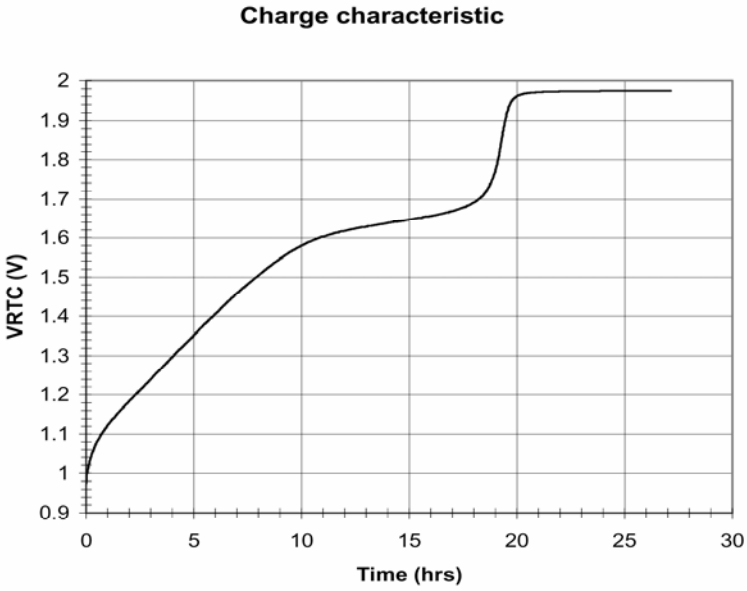

Figure 11: Maxell TC614 Charge Characteristic

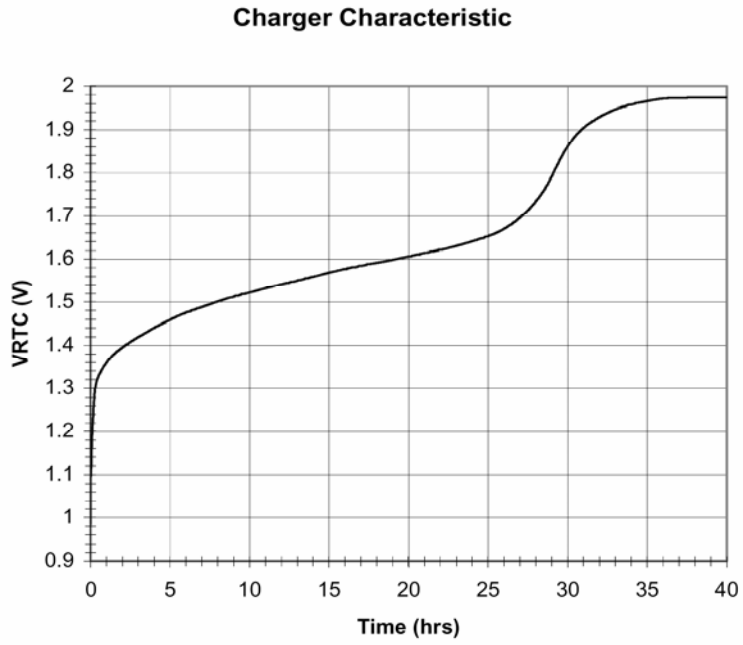

Figure 12: Seiko TS621 Charge Characteristic

Note:
Gold-capacitance backup
Some suitable coin cells are the electric double layer capacitors available from Seiko (XC621), or from Panasonic (EECEM0E204A). They have a small physical size (6.8 mm diameter) and a nominal capacity of 0.2F to 0.3F, giving hours of backup time.

3.9 Serial interfaces

SIM300C provides two unbalanced asynchronous serial ports. One is the serial port and another is the debug port. The GSM module is designed as a DCE (Data Communication Equipment), following the traditional DCE-DTE (Data Terminal Equipment) connection, the module and the client (DTE) are connected through the following signal (as following figure shows). Autobauding supports baud rate from 1200 bps to 115200bps.

Serial port
- Port/TXD @ Client sends data to the RXD signal line of module
- Port/RXD @ Client receives data from the TXD signal line of module

Debug port
- Port/TXD @ Client sends data to the DBG_RXD signal line of module
- Port/RXD @ Client receives data from the DBG_TXD signal line of module

All pins of all serial ports have 8mA driver, the logic levels are described in following table

SIMCOM CONFIDENTIAL FILE

Table 12: Logic levels of serial port pins

Parameter	Min	Max	Unit
Logic low input	0	0.3*VDD_EXT	V
Logic high input	0.7 *VDD_EXT	VDD_EXT +0.3	V
Logic low output	GND	0.2	V
Logic high output	VDD_EXT -0.2	VDD_EXT	V

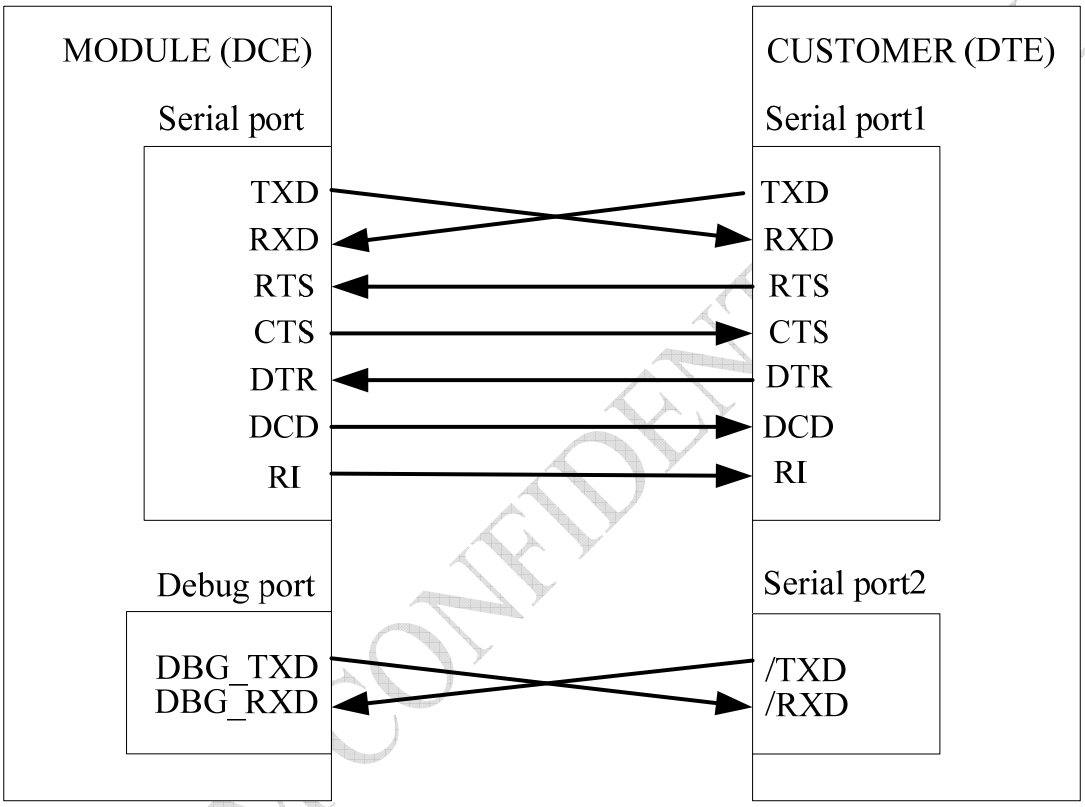

Figure 13: Interface of serial port

3.9.1 Function of serial port supporting

Serial port

- Seven lines on Serial Port Interface.
- Contains Data lines TXD and RXD, State lines RTS and CTS, Control lines DTR, DCD and RI.
- Serial Port can be used for CSD FAX, GPRS service and send AT command of controlling module. Also Serial Port can be used for multiplexing function.
- Serial Port supports the communication rates as following:
  300, 1200, 2400, 4800, 9600, 19200, 38400, 57600, 115200 Default as 115200bps.
- Autobauding supports the communication rates as following:

SIMCOM CONFIDENTIAL

1200, 2400, 4800, 9600, 19200, 38400, 57600 and 115200bps.

Autobauding allows the GSM engine to automatically detect the baud rate configured in the host application. The serial interface of the GSM engine supports autobauding for the following baud rates: 1200, 2400, 4800, 9600, 19200, 38400, 57600, 115200bps. Factory setting is autobauding enabled. This gives you the flexibility to put the GSM engine into operation no matter what baud rate your host application is configured to. To take advantage of autobauding mode specific attention should be paid to the following requirements:

Synchronization between DTE and DCE

When DCE powers on with the autobauding enabled, it is recommended to wait 2 to 3 seconds before sending the first AT character. After receiving the “OK” response, DTE and DCE are correctly synchronized.

Restrictions on autobauding operation

- The serial interface has to be operated at 8 data bits, no parity and 1 stop bit (factory setting).
- The Unsolicited Result Codes like "RDY", "+CFUN: 1" and "+CPIN: READY” are not indicated when you start up the ME while autobauding is enabled. This is due to the fact that the new baud rate is not detected unless DTE and DCE are correctly synchronized as described above.

Note: You can use AT+IPR=x;&W to set a fixed baud rate and save the configuration to non-volatile flash memory. After the configuration was saved as fix baud rate, the Unsolicited Result Codes like "RDY" should be received from the serial port all the time when the SIM300 was power on.

Debug port

- Two lines on Serial Port Interface
- Only contains Data lines /TXD and /RXD
- Debug Port only used for debugging. It cannot be used for CSD call, FAX call. And the Debug port can not use multiplexing function;
- Debug port supports the communication rates as following:
  9600, 19200, 38400, 57600, 115200bps

3.9.2 Software upgrade and serial port

The TXD、RXD、DBG_TXD、DBG_RXD and GND must be connected to the IO connector when user need to upgrade software and debug software, the TXD、RXD should be used for software upgrade, the DBG_TXD、DBG_RXD for software debug. The PWRKEY pin is recommended to connect to the IO connector. The user also can add a switch between the PWRKEY and the GND. The PWRKEY should be connected to the GND when SIM300C is upgrading software. Please refer to the following figure.

SIMCOM CONFIDENTIAL FILE

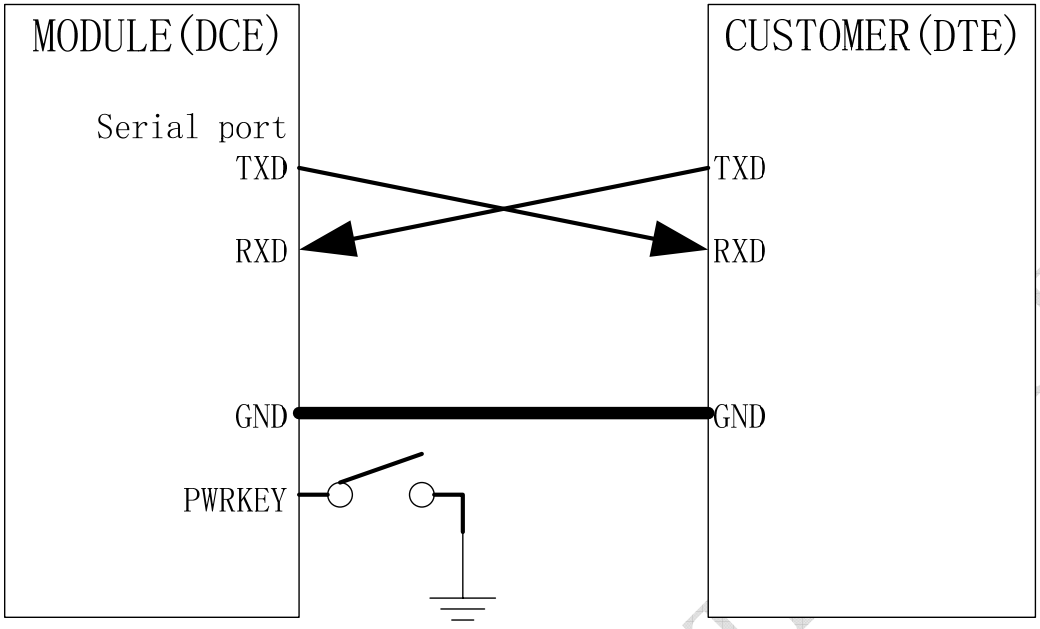

Figure 14: Interface of software upgrade

Note: The RTS PIN must be connected to the GND in the customer circuit when only TXD and RXD are used in the Serial Port communication.

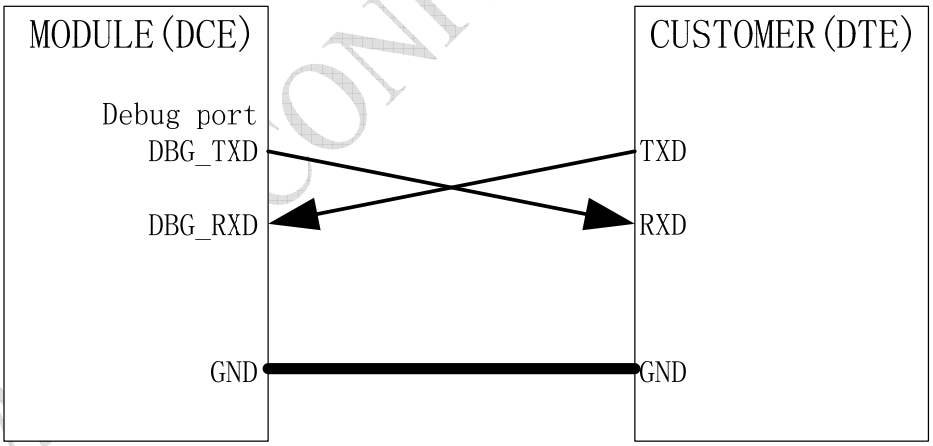

Figure 15: Interface of software debug

Note: The serial port doesn't support the RS_232 level, it only supports the TTL level. You should add the level converter IC between the DCE and DTE, if you connect it to the PC.

3.10 Audio interfaces

Table 13: Audio interface signal

	Name	Pin	Function
(AIN1/AOUT1)	MIC1P	54	Microphone1 input +
	MIC1N	56	Microphone1 input -
	SPK1P	53	Audio1 output+
	SPK1N	55	Audio1 output-
(AIN2/AOUT2)	MIC2P	58	Microphone2 input +
	MIC2N	60	Microphone2 input -
	SPK2P	57	Audio2 output+
	SPK2N	59	Audio2 output-

The module provides two analogy input channels, AIN1 and AIN2, which may be used for both microphone and line inputs. The electret microphone is recommended when the interface used for microphone. One of the two channels is typically used with a microphone built into a handset. The other channel is typically used with an external microphone or external line input. The module analogy input configuration is determined by control register settings and established using analogy multiplexes.

For each channels, you can use AT+CMIC to set the input gain level of microphone, use AT+ECHO to set the parameters for echo suppression. Also, you can use AT+SIDET to set the side-tone level. For detail, please refer to *document [1]*.

It is suggested that you adopt the one of following two matching circuits in order to satisfy speaker effect. The difference audio signals have to be layout according to difference signal layout rules. As show in following figures ***(Note: all components package are 0603)*** .If you want to adopt a amplifier circuit for audio, we recommend National company's LM4890. But you can select it according to your needs.

SIMCOM CONFIDENTIAL

3.10.1 Speaker interface configuration

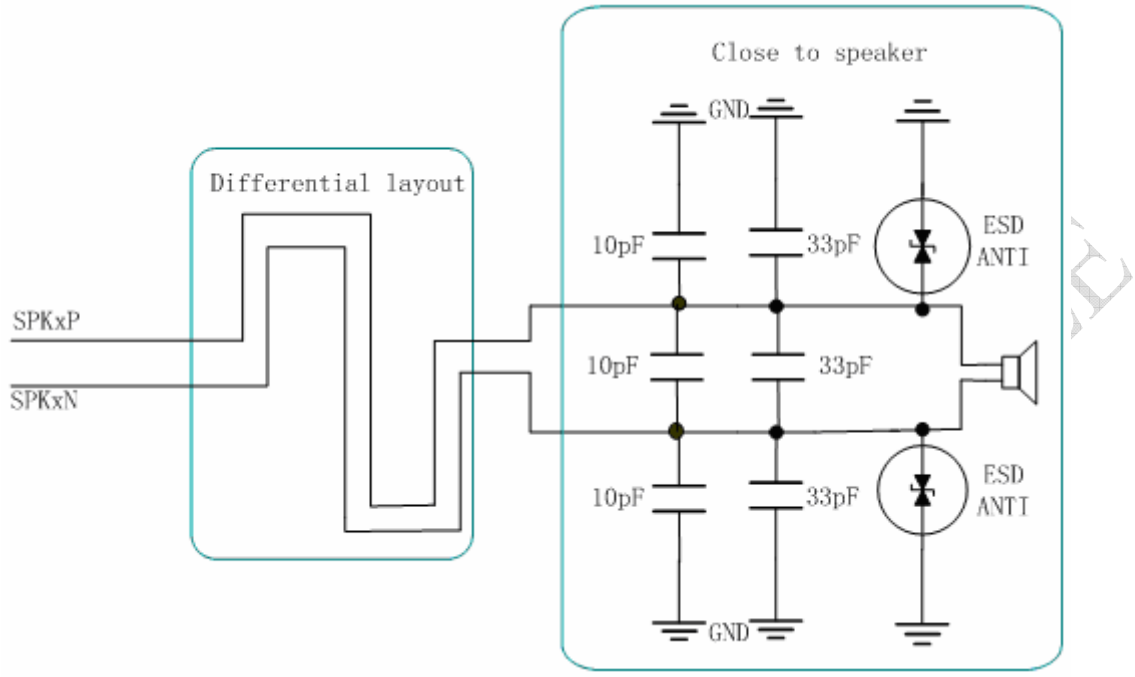

Figure 16: Speaker interface configuration

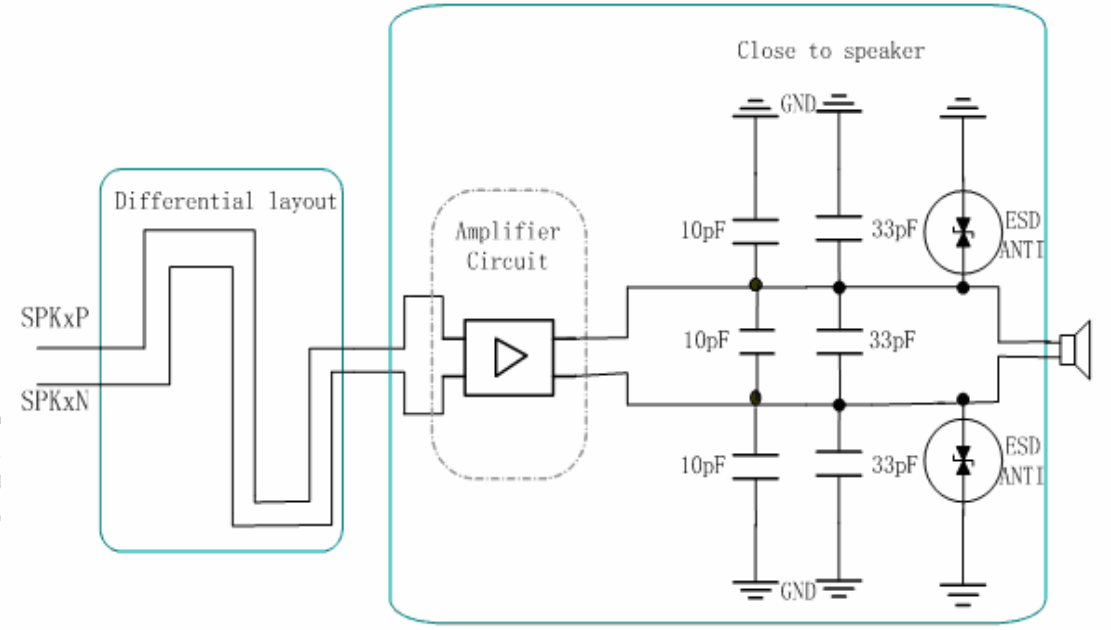

Figure 17: Speaker interface with amplifier configuration

3.10.2 Microphone interfaces configuration

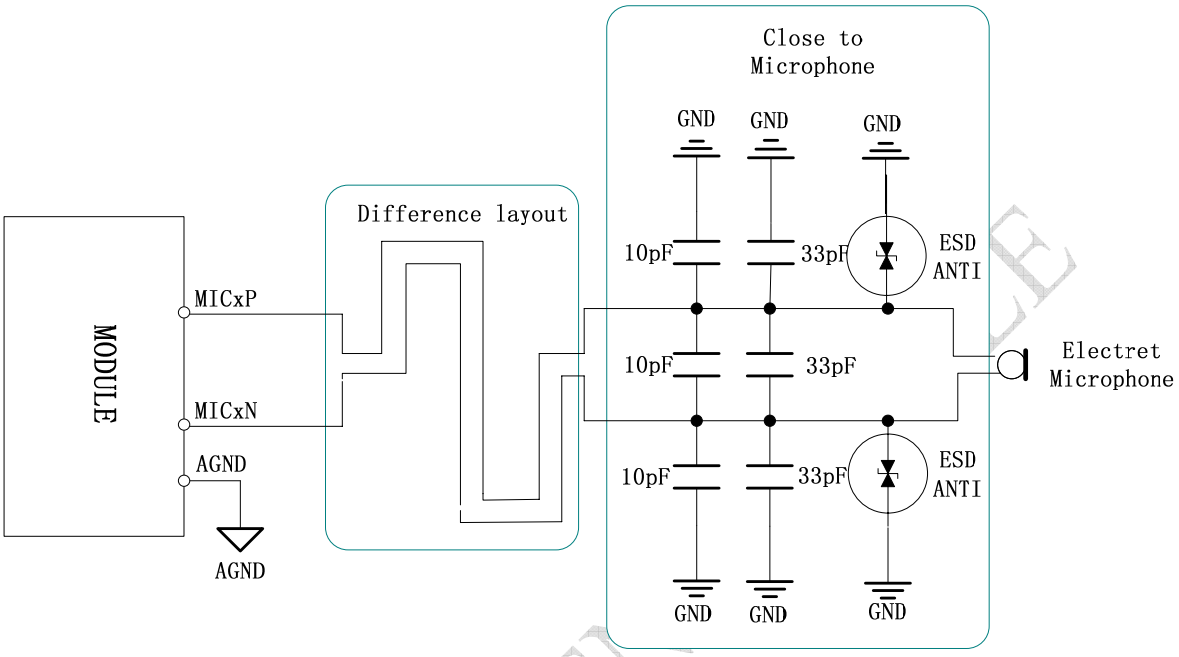

Figure 18: Microphone interface configuration

3.10.3 Earphone interface configuration

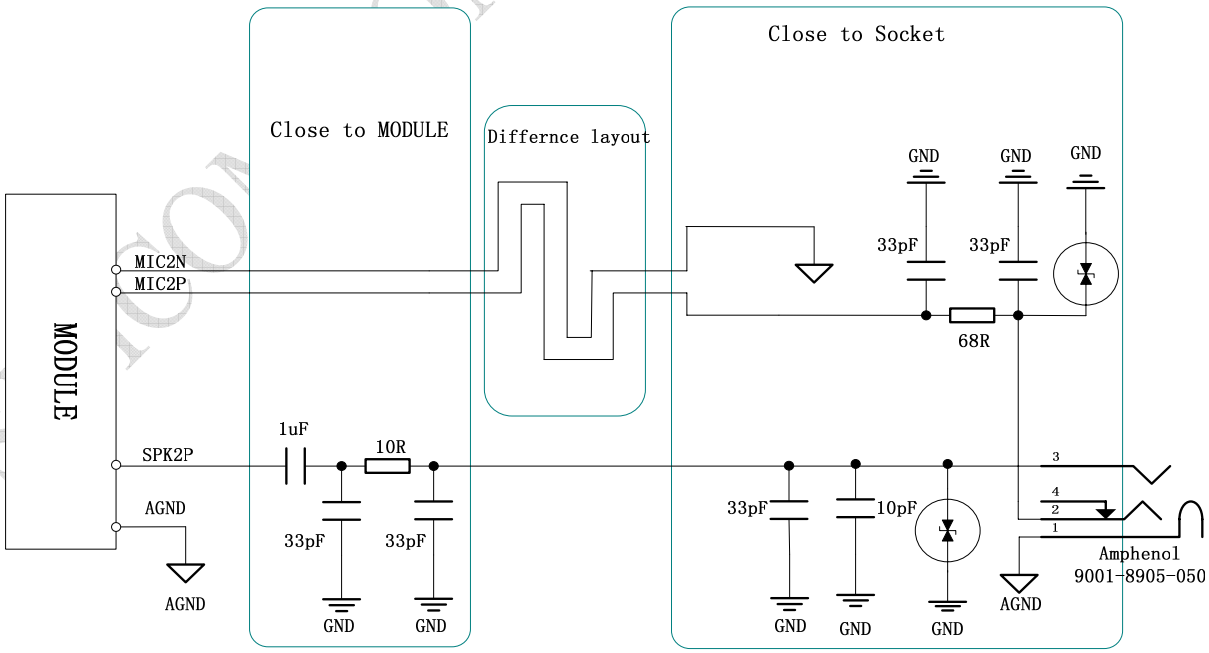

Figure 19: Earphone interface configuration

3.10.4 Referenced electronic characteristic

Table 14: MIC Input Characteristics

Parameter	Min	Typ	Max	Unit
Working Voltage	1.2	1.5	2.0	V
Working Current	200		500	uA
External Microphone Load Resistance	1.2	2.2		k Ohms

Table 15: Audio Output Characteristics

Parameter			Min	Typ	Max	Unit
Normal Output(SPK1)	Single Ended	load Resistance	27	32		Ohm
		Ref level		0.5477 -12.04		Vpp dBm
	Differential	load Resistance	27	32		ohm
		Ref level		1.0954 -6.02		Vpp dBm
Auxiliary Output(SPK2)	Single Ended	load Resistance	27	32		Ohm
		Ref level		0.5477 -12.04		Vpp dBm
	Differential	load Resistance	27	32		ohm
		Ref level		1.0954 -6.02		Vpp dBm

Table 16: Buzzer Output Characteristics

Parameter	Min	Typ	Max	Unit
Working Voltage	2.4	2.8	3.3	V
Working Current		2		mA
Load Resistance	1			k Ohms

3.11 Buzzer

The PIN 23 on the DIP connector can be used to drive a buzzer to indicate incoming call. The output volume of buzzer can be set by "AT+CRSL". The reference circuit for buzzer is shown as following figure:

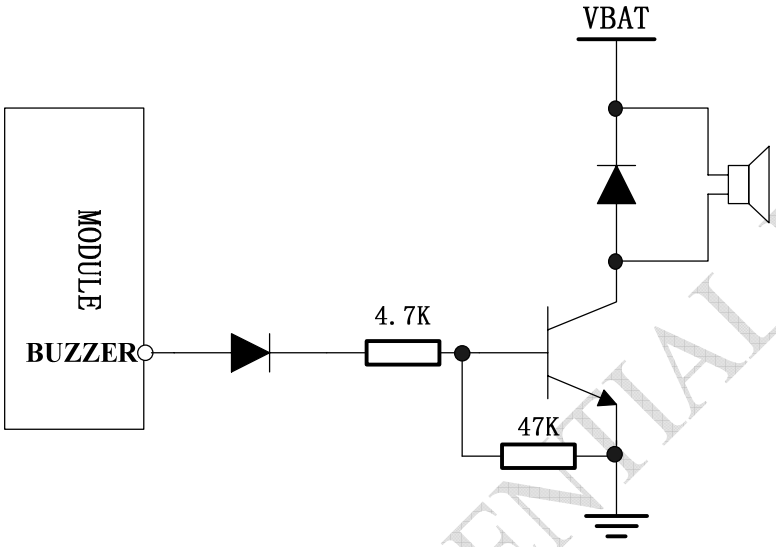

Figure 20: Reference circuit for Buzzer

3.12 SIM card interface

3.12.1 SIM card application

You can use AT Command to get information in SIM card. For more information, please refer to *document [1]*.

The SIM interface supports the functionality of the GSM Phase 1 specification and also supports the functionality of the new GSM Phase 2+ specification for FAST 64 kbps SIM (intended for use with a SIM application Tool-kit).

Both 1.8V and 3.0V SIM Cards are supported.

The SIM interface is powered from an internal regulator in the module having normal voltage 3V. All pins reset as outputs driving low. Logic levels are as described in table

SIMCOM CONFIDENTIAL FILE

Table 17: Signal of SIM interface (DIP connector)

Pin	Signal	Description
25	SIM_VDD	SIM Card Power output automatic output on SIM mode, one is 3.0V±10%, another is 1.8V±10%. Current is about 10mA.
29	SIM_DATA	SIM Card data I/O
31	SIM_CLK	SIM Card Clock
27	SIM_RST	SIM Card Reset
33	SIM_PRESENCE	SIM Card Presence

Following is the reference circuit about SIM interface. We recommend an Electro-Static discharge device ST (www.st.com) ESDA6V1W5 or ON SEMI (www.onsemi.com) SMF05C for "ESD ANTI". Note that the SIM peripheral circuit should be closed to the SIM card socket.

The SIM_PRESENCE pin is used for detecting the SIM card removal. You can use the AT command "AT+CSDT" to configure this function. For detail of this AT command, please refer to *document [1]*:

You can select the 8 pins SIM card holder. The reference circuit about 8 pins SIM card holder illustrates as the following figure.

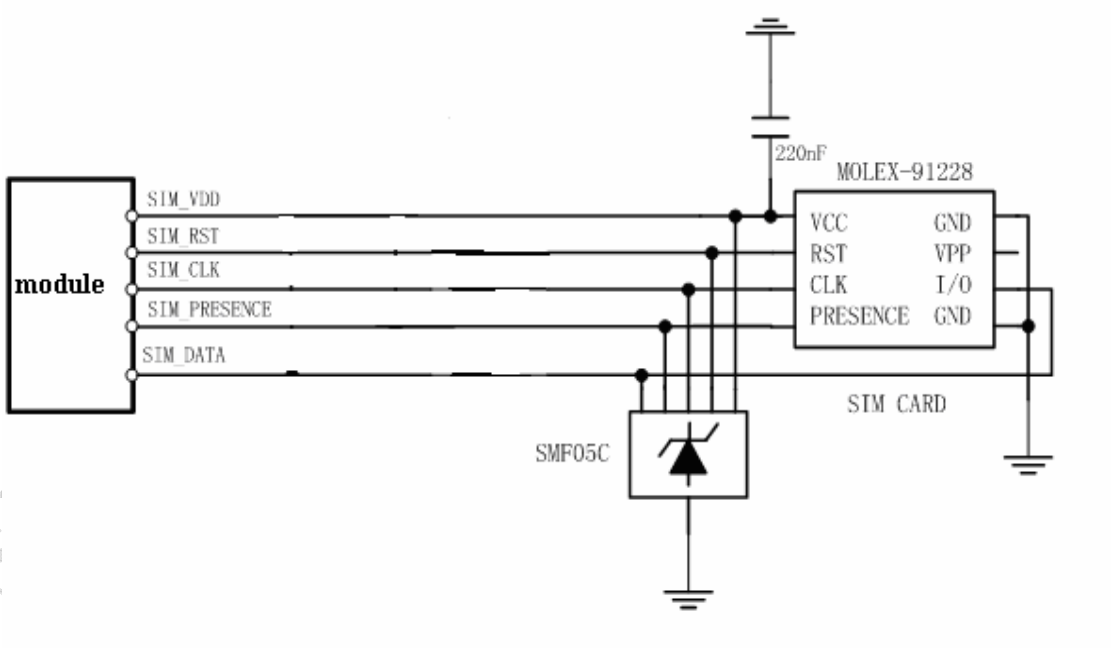

Figure 21: SIM interface reference circuit with 8 pins SIM card holder

If you don't use the SIM card detection function, you can let the SIM_PRESENCE pin NC or connect to the GND. The reference circuit about 6 pins SIM card holder illustrate as the following figure.

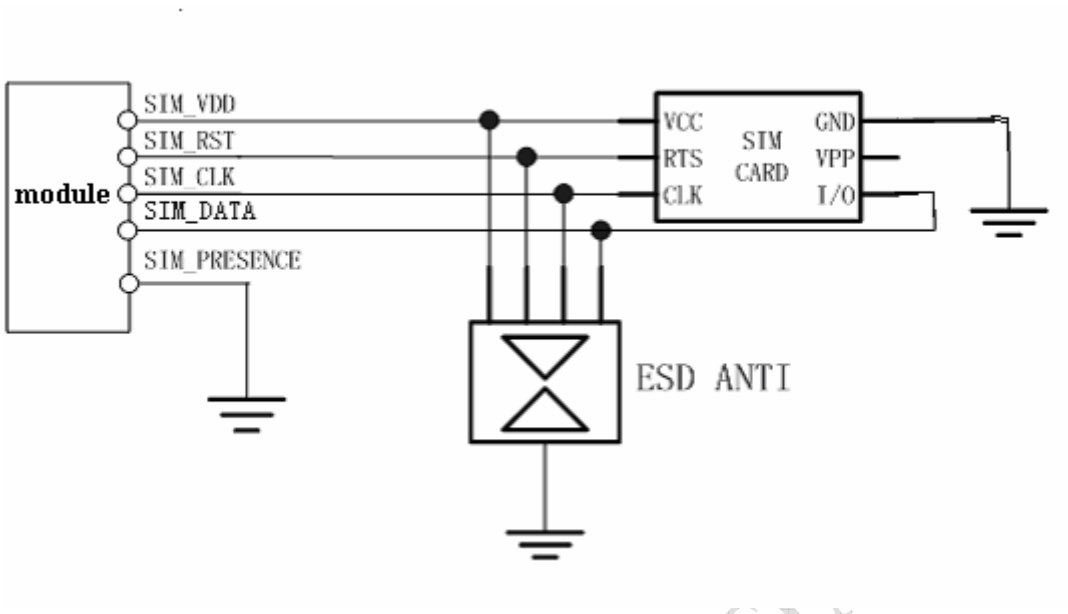

Figure 22: SIM interface reference circuit with 6 pins SIM card holder

3.12.2 Design considerations for SIM card holder

For 6 pins SIM card holder, we recommend to use Amphenol C707 10M006 512 2 .You can visit http://www.amphenol.com for more information about the holder.

SIMCOM CONFIDENTIAL

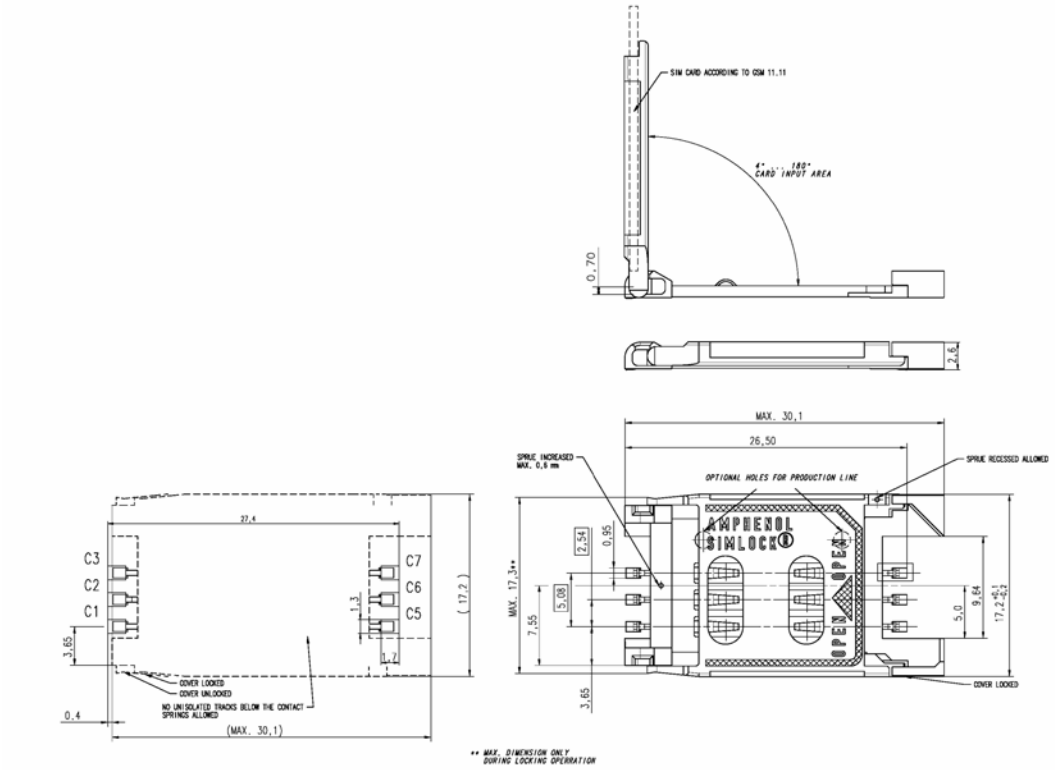

Figure 23: Amphenol C707 10M006 512 2 SIM card holder

Table 18: Pin description (Amphenol SIM card holder)

Pin	Signal	Description
C1	SIM_VDD	SIM Card Power supply, it can identify automatically the SIM Card power mode, one is 3.0V±10%, another is 1.8V±10%. Current is about 10mA.
C2	SIM_RST	SIM Card Reset.
C3	SIM_CLK	SIM Card Clock.
C5	GND	Connect to GND.
C6	VPP	Not connect.
C7	SIM_DATA	SIM Card data I/O.

For 8 pins SIM card holder, we recommend to use Molex 91228.You can visit http://www.molex.com for more information about the holder.

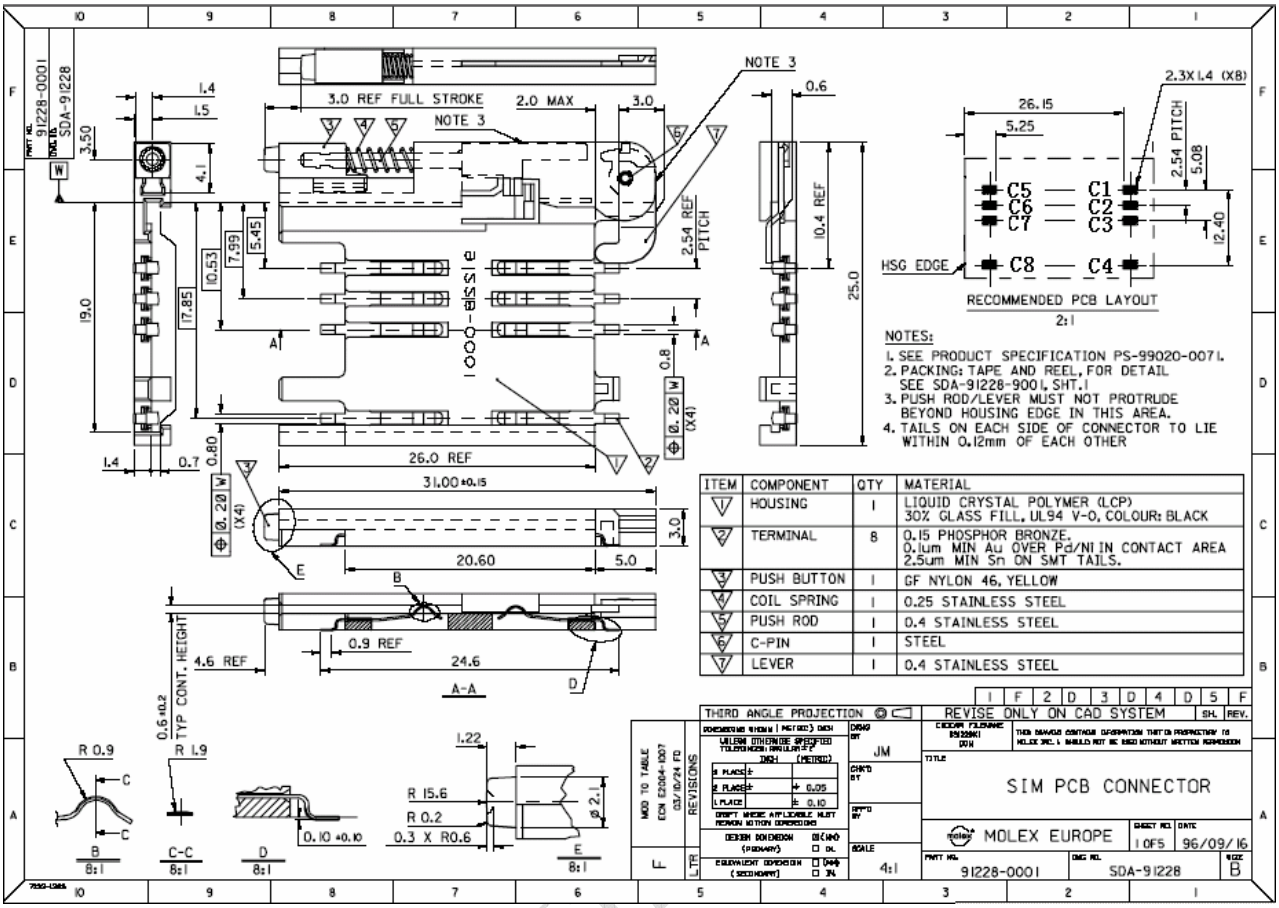

Figure 24: Molex 91228 SIM card holder

Table 19: Pin description (Molex SIM card holder)

Pin	Signal	Description
C1	SIM_VDD	SIM Card Power supply, it can identify automatically the SIM Card power mode, one is 3.0V±10%, and another is 1.8V±10%. Current is about 10mA.
C2	SIM_RST	SIM Card Reset.
C3	SIM_CLK	SIM Card Clock.
C4	GND	Connect to GND.
C5	GND	Connect to GND.
C6	VPP	Not connect.
C7	SIM_DATA	SIM Card data I/O.
C8	SIM_PRESENCE	Detect SIM Card Presence

Notes: Implement SIM Card Presence function must select 8 pin SIM Card Holder, and use AT command enable SIM Card Presence detect.

3.13 LCD interface

SIM300C provides a serial LCD display interface that supports serial communication with LCD device. These are composite pins that can be used as GPIO ports or LCD display interface according to your application. When used as LCD interface, the following table is the pin definition. LCD interface timing should be united with the LCD device.

Table 20: PIN define of LCD interface

Pin (On DIP connector)	Name	Function
38	DISP_CS	Display enable
40	DISP_CLK	Display clock for LCD
42	DISP_DAT	Display data output
44	DISP_D/C	Display data or command select
46	DISP_RST	LCD reset

3.14 ADC

SIM300C provides one auxiliary ADC (General purpose analog to digital converter.) as voltage input pin, which can be used to detect the values of some external items such as voltage, temperature etc. We can use AT command "AT+CADC" to read the voltage value added on ADC pin. For detail of this AT command, please refer to *document [1]*.

Table 21: ADC pin of SIM300C

Name	Pin (On DIP connector)	Input voltage scope(V)
ADC0	12	0 – 2.4

3.15 Behaviors of the RI line (serial port interface only)

Table 22: Behaviours of the RI line

State	RI respond
Standby	HIGH

SIMCOM CONFIDENTIAL

Voice calling	Change LOW, then: （1）Change to HIGH when establish calling. （2）Use AT command ATH, the RI pin changes to HIGH. （3）Sender hangs up, change to HIGH.
Data calling	Change LOW, then： （1）Change to HIGH when establish calling. （2）Use AT command ATH, the RI changes to HIGH.
SMS	When receive SMS, The RI will change to LOW and hold low level about 120 ms, then change to HIGH.

If the module is used as caller, signal RI will maintain high. But when it is used as receiver, following is timing of ring.

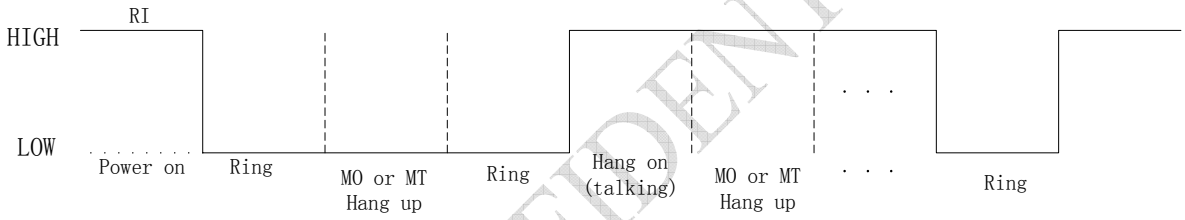

Figure 25: SIM300C Services as Receiver

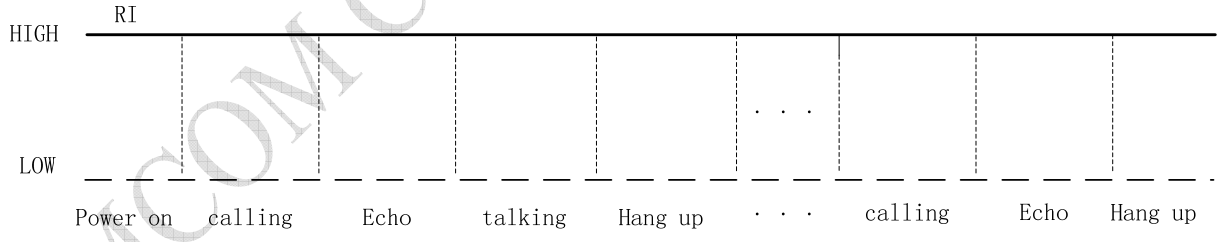

Figure 26: SIM300C Services as caller

3.16 Network status indication LED lamp

The PIN 16 on the DIP connector can be used to drive a network status indication LED lamp. The working state of this pin is listed in following table:

SIMCOM CONFIDENTIAL

Table 23: Working state of network status indication LED pin

State	SIM300C function
Off	SIM300C is not running
64ms On/ 800ms +50%Off	SIM300C does not find the network
64ms On/ 3000ms +50%Off	SIM300C find the network
64ms On/ 300ms +50% Off	GPRS communication

We provide a reference circuit for you, shown as following figure:

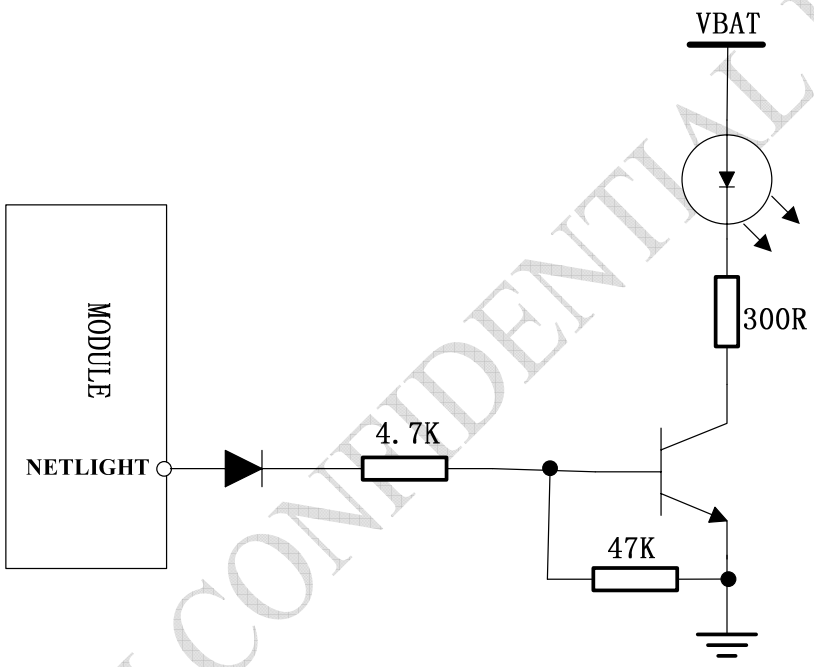

Figure 27: Reference circuit for Network status LED

3.17 General purpose input & output (GPIO)

SIM300C provides a limited number of General Purpose Input/Output signal pins.

Table 24: GPIO Pins of SIM300C

Pin	Name	Function
19	STATUS	The Status indication of the module，General Purpose Output Port
21	GPIO0	General Purpose Input/Output Port
35	GPIO1	General Purpose Input/Output Port

SIMCOM CONFIDENTIAL FILE

4 Antenna interface

The RF interface has an impedance of 50Ω. To suit the physical design of individual applications SIM300C offers two alternatives:

- Recommended approach: antenna connector on the component side of the PCB
- Antenna pad and grounding plane placed on the bottom side.

To minimize the loss on the RF cable, it need be very careful to choose RF cable. We recommend the insertion loss should be meet following requirement:

- EGSM900<1dB
- DCS1800/PCS1900<1.5dB

4.1 Antenna installation

4.1.1 Antenna connector

SIM300C uses MURATA's MM9329-2700 RF connector on the module side, we recommend user use MURATA's MXTK92XXXXX as matching connector on the application side. Please refer to appendix for detail info about MURATA's MXTK92XXXXX.

4.1.2 Antenna pad

The antenna can be soldered to the pad, or attached via contact springs. To help you to ground the antenna, SIM300C comes with a grounding plane located close to the antenna pad.
SIM300C material properties:
SIM300C PCB Material: FR4
Antenna pad: Gold plated pad
Antenna pad soldering temperature: we recommend 350℃.

Note: The soldering time for antenna pad and GND pad are different, less than 3s for antenna pad and less than 10s for GND pad.

SIMCOM CONFIDENTIAL FILE

4.2 Module RF output power

Table 25: SIM300C conducted RF output power

Frequency	Max	Min
EGSM900	33dBm ±2db	5dBm±5db
DCS1800	30dBm ±2db	0dBm±5db
PCS1900	30dBm ±2db	0dBm±5db

4.3 Module RF receive sensitivity

Table 26: SIM300C conducted RF receive sensitivity

Frequency	Receive sensitivity
EGSM900	< -106dBm
DCS1800	< -106dBm
PCS1900	< -106dBm

4.4 Module operating frequencies

Table 27: SIM300C operating frequencies

Frequency	Receive	Transmit
EGSM900	925 ～ 960MHz	880 ～ 915MHz
DCS1800	1805 ～ 1880MHz	1710 ～ 1785MHz
PCS1900	1930 ～ 1990MHz	1850 ～ 1910MHz

SIMCOM CONFIDENTIAL FILE

5 Electrical, reliability and radio characteristics

5.1 Absolute maximum ratings

Absolute maximum rating for power supply and voltage on digital and analog pins of SIM300C are list in following table:

Table 28: Absolute maximum ratings

Parameter	Min	Max	Unit
Peak current of power supply	0	4.0	A
RMS current of power supply (during one TDMA- frame)	0	0.7	A
Voltage at digit pins	-0.3	3.3	V
Voltage at analog pins	-0.3	3.0	V
Voltage at digit/analog pins in POWER DOWN mode	-0.25	0.25	V

5.2 Operating temperatures

The operating temperature is listed in following table:

Table 29: SIM300C operating temperature

Parameter	Min	Typ	Max	Unit
Ambient temperature	-30	25	70	℃
Restricted operation*	-30		80	℃
Storage temperature	-30		+85	℃

* SIM300C can work, but the deviation from the GSM specification may occur.

SIMCOM CONFIDENTIAL FILE

5.3 Power supply ratings

Table 30: SIM300C power supply ratings

Parameter	Description	Conditions	Min	Typ	Max	Unit
VBAT	Supply voltage	Voltage must stay within the min/max values, including voltage drop, ripple, and spikes.	3.4	4.0	4.5	V
	Voltage drop during transmit burst	Normal condition, power control level for Pout max			400	mV
	Voltage ripple	Normal condition, power control level for Pout max @ f<200kHz @ f>200kHz			 50 2	mV
I_{VBAT}	Average supply current	POWER DOWN mode SLEEP mode (BS-PA-MFRMS=5)		35 2.5		uA mA
		IDLE mode (Not connect console) EGSM 900 DCS1800/ PCS1900		 23 23		 mA
		IDLE mode（connect console） EGSM 900 DCS1800/ PCS1900		 33 33		mA
		TALK mode EGSM 900 DCS1800/ PCS1900		 260 200		mA
		DATA mode, GPRS (3 Rx,2Tx) EGSM 900 DCS1800/ PCS1900		 470 340		mA
		DATA mode, GPRS (4 Rx,1Tx) EGSM 900 DCS1800/ PCS1900		 275 220		mA
	Peak supply current (during transmission slot every 4.6ms)	Power control level for Pout max		2		A

5.4 Current consumption

The values for current consumption listed below refer to Table 31.

Table 31: SIM300C current consumption

Voice Call	
EGSM 900	@power level #5 <350mA,Typical 260mA @power level #10,Typical 130mA @power level #19,Typical 86mA
DCS 1800/ PCS 1900	@power level #0 <300mA,Typical 200mA @power level #10,Typical 87mA @power level #15,Typical 80mA
GPRS Data	
DATA mode, GPRS (1 Rx,1 Tx) CLASS 8	
EGSM 900	@power level #5 <350mA,Typical 260mA @power level #10,Typical 125mA @power level #19,Typical 84mA
DCS 1800/ PCS 1900	@power level #0 <300mA,Typical 200mA @power level #10,Typical 83mA @power level #15,Typical 76mA
DATA mode, GPRS (3 Rx, 2 Tx) CLASS 10	
EGSM 900	@power level #5 <550mA,Typical 470mA @power level #10,Typical 225mA @power level #19,Typical 142mA
DCS1800/ PCS1900	@power level #0 <450mA,Typical 340mA @power level #10,Typical 140mA @power level #15,Typical 127mA
DATA mode, GPRS (4 Rx,1 Tx) CLASS 8	
EGSM 900	@power level #5 <350mA,Typical 270mA @power level #10,Typical 160mA @power level #19,Typical 120mA
DCS 1800/ PCS 1900	@power level #0 <300mA,Typical 220mA @power level #10,Typical 120mA @power level #15,Typical 113mA

Class 10 is default set when the module work at data translation mode, the module can also work at class 8 set by AT command.

SIMCOM CONFIDENTIAL FILE

5.5 Electro-static discharge

The GSM engine is not protected against Electrostatic Discharge (ESD) in general. Therefore, it is subject to ESD handing precautions that typically apply to ESD sensitive components. Proper ESD handing and packaging procedures must be applied throughout the processing, handing and operation of any application using a SIM300C module.

Despite of this, we have equipped some clamp diodes to protect most lines of SIM300C from over voltage. And the measured values are shown as the following table:

Table 32: The ESD endure statue measured table (Temperature: 25℃, Humidity:45%)

Part	Contact discharge	Air discharge
VBAT,GND	±4KV	±8KV
KBR0-4,KBC0-4, NETLIGHT	±1KV	±2KV
Antenna port	±4KV	±8KV
Other port	±4KV	±8KV

SIMCOM CONFIDENTIAL FILE

6 Mechanics

This chapter describes the mechanical dimensions of SIM300C.

6.1 Mechanical dimensions of SIM300C

Following shows the Mechanical dimensions of SIM300C (top view and side view).

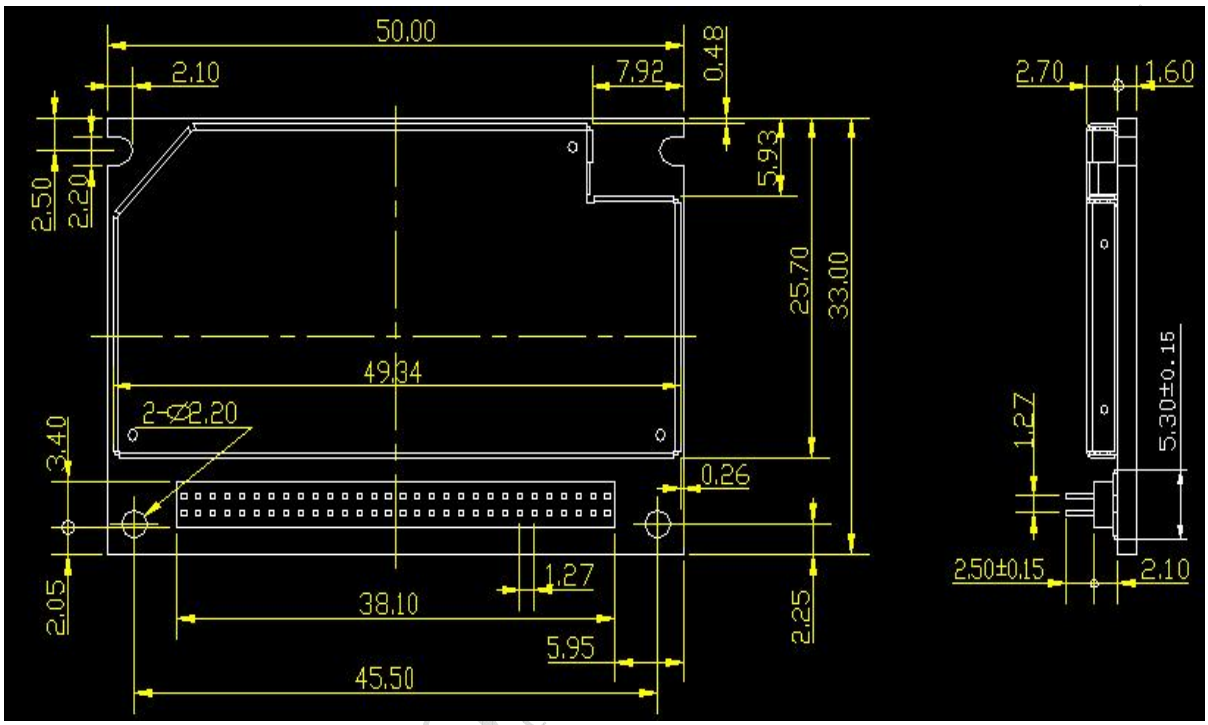

Figure 28: Mechanical dimensions of SIM300C（Unit: mm）

6.2 Mounting SIM300C onto the application platform

Use the connector ASTRON 1590060-093 and four mounting pads to fix the SIM300C onto customer platform.

6.3 DIP connector

We recommend ASTRON Company's 1590060-093 as the Board to Board DIP connector. This high density SMT connector is designed for parallel PCB-to-PCB applications.

SIMCOM CO

6.3.1 Mechanical dimensions of the ASTRON 1590060-093

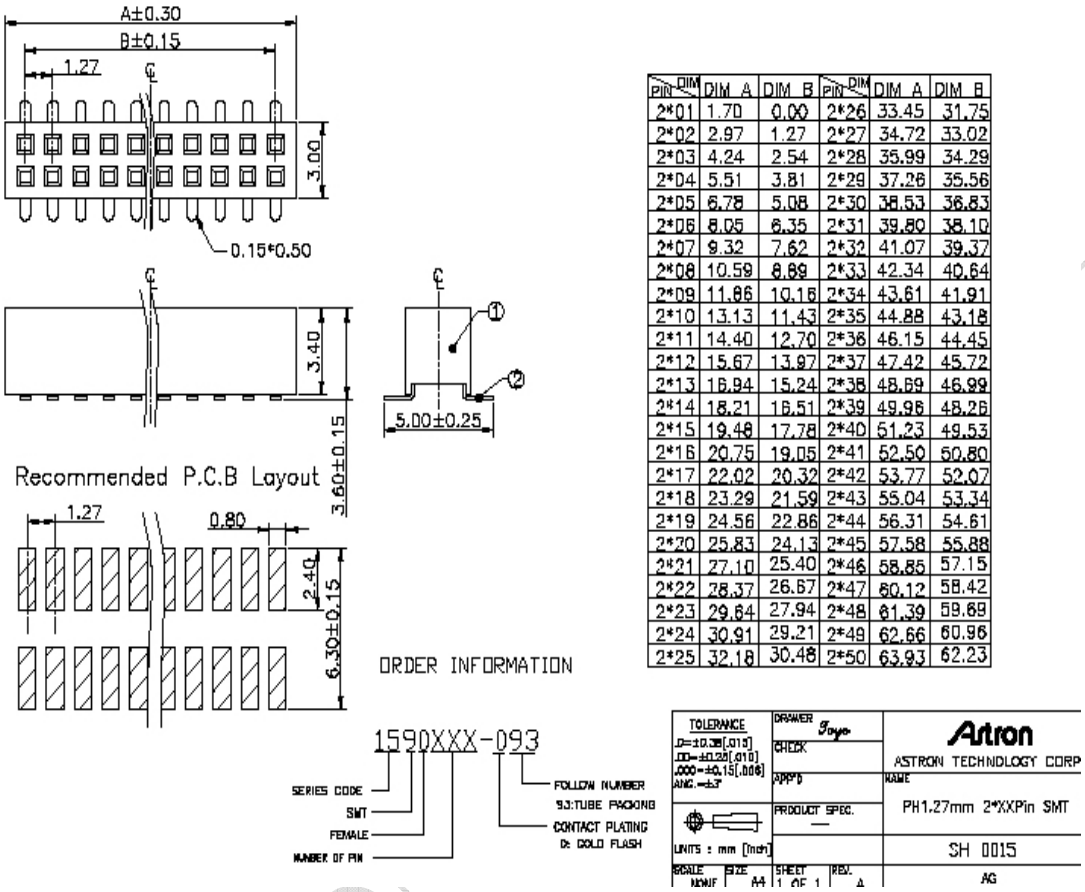

PIN \ DIM	DIM A	DIM B	PIN \ DIM	DIM A	DIM B
2*01	1.70	0.00	2*26	33.45	31.75
2*02	2.97	1.27	2*27	34.72	33.02
2*03	4.24	2.54	2*28	35.99	34.29
2*04	5.51	3.81	2*29	37.26	35.56
2*05	6.78	5.08	2*30	38.53	36.83
2*06	8.05	6.35	2*31	39.80	38.10
2*07	9.32	7.62	2*32	41.07	39.37
2*08	10.59	8.89	2*33	42.34	40.64
2*09	11.86	10.16	2*34	43.61	41.91
2*10	13.13	11.43	2*35	44.88	43.18
2*11	14.40	12.70	2*36	46.15	44.45
2*12	15.67	13.97	2*37	47.42	45.72
2*13	16.94	15.24	2*38	48.69	46.99
2*14	18.21	16.51	2*39	49.96	48.26
2*15	19.48	17.78	2*40	51.23	49.53
2*16	20.75	19.05	2*41	52.50	50.80
2*17	22.02	20.32	2*42	53.77	52.07
2*18	23.29	21.59	2*43	55.04	53.34
2*19	24.56	22.86	2*44	56.31	54.61
2*20	25.83	24.13	2*45	57.58	55.88
2*21	27.10	25.40	2*46	58.85	57.15
2*22	28.37	26.67	2*47	60.12	58.42
2*23	29.64	27.94	2*48	61.39	59.69
2*24	30.91	29.21	2*49	62.66	60.96
2*25	32.18	30.48	2*50	63.93	62.23

Figure 29: ASTRON 1590060-093 DIP connector pin side

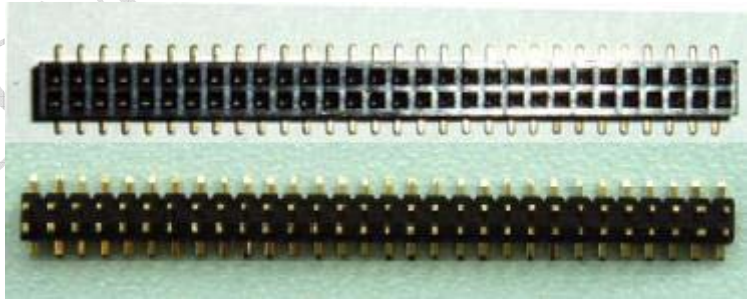

Figure 30: ASTRON DIP connector physical photo

NOTE:

The connector ASTRON 1491060-094 is used in pin side (SIM300C module) and ASTRON 1590060-093 is used in socket side (user side).

6.4 RF adapter cabling

The RF connector in module side is Murata Company Microwave Coaxial Connectors MM9329-2700B, it makes a pair with Murata Company RF connector MXTK. It is have high performance with wide frequency range, surface mountable and reflow solderable. Following is parameter. Certainly you can visit http://www.murata.com/ for more information.

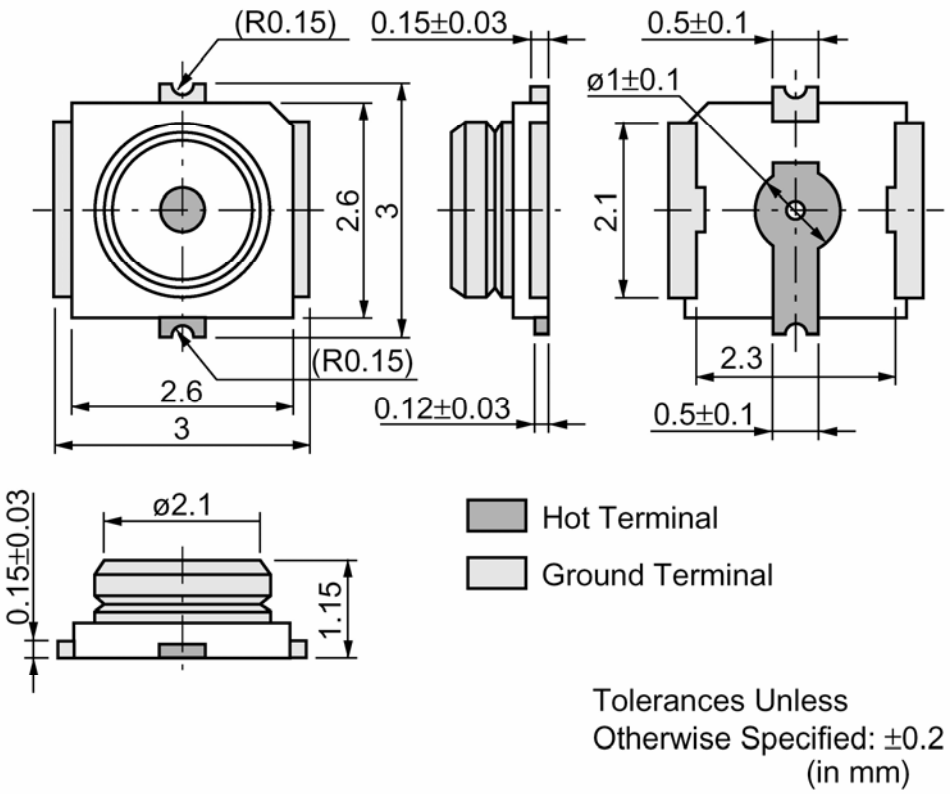

Figure 31: MM9329-2700B

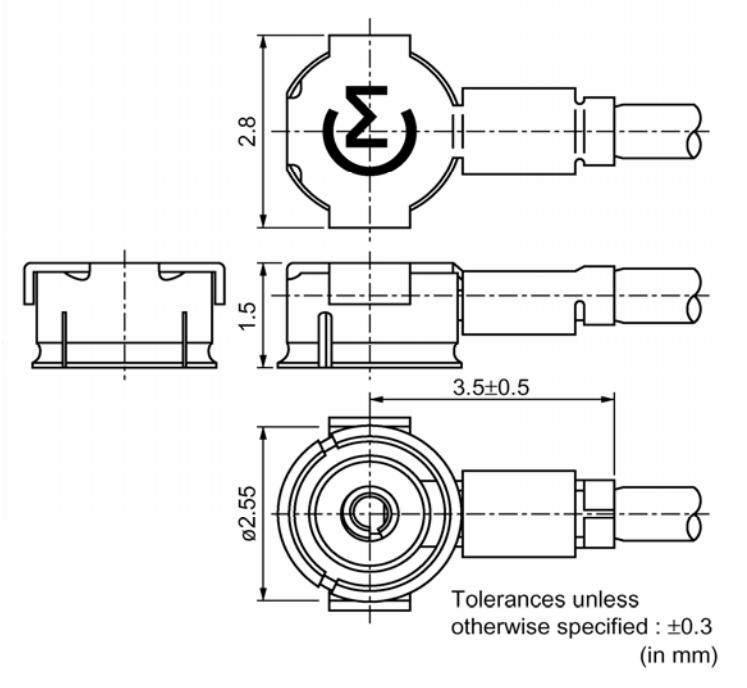

Figure 32: RF connector MXTK

For more information about the connector, please visit http://www.murata.com/

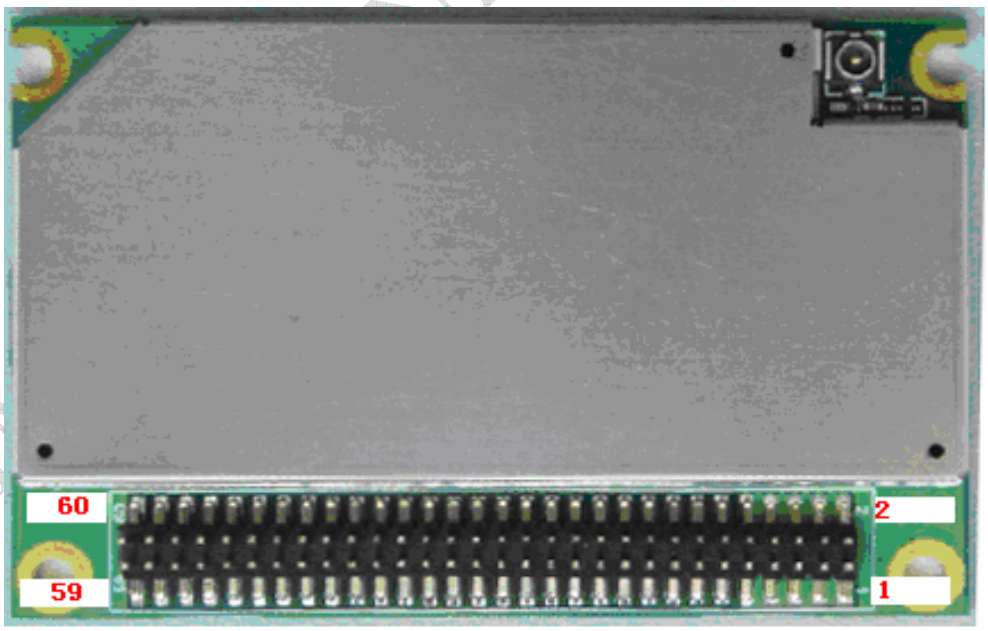

Figure 33: Bottom view of SIM300C

6.5 PIN assignment of DIP connector of SIM300C

Table 33: Connection diagrams

PIN NO.	PIN NAME	I/O	PIN NO.	PIN NAME	I/O
1	VBAT	I	**2**	GND	
3	VBAT	I	**4**	GND	
5	VBAT	I	**6**	GND	
7	VBAT	I	**8**	GND	
9	VBAT	I	**10**	GND	
11	VCHG	I	**12**	ADC0	I
13	TEMP_BAT	I	**14**	VRTC	I/O
15	VDD_EXT	O	**16**	NETLIGHT	O
17	PWRKEY	I	**18**	KBC0	O
19	STATUS	O	**20**	KBC1	O
21	GPIO0	I/O	**22**	KBC2	O
23	BUZZER	O	**24**	KBC3	O
25	SIM_VDD	O	**26**	KBC4	O
27	SIM_RST	O	**28**	KBR0	I
29	SIM_DATA	I/O	**30**	KBR1	I
31	SIM_CLK	O	**32**	KBR2	I
33	SIM_PRESENCE	I	**34**	KBR3	I
35	GPIO1	I/O	**36**	KBR4	I
37	DCD	O	**38**	DISP_CS	O
39	DTR	I	**40**	DISP_CLK	O
41	RXD	I	**42**	DISP_DATA	I/O
43	TXD	O	**44**	DISP_D/C	O
45	RTS	I	**46**	DISP_RST	O
47	CTS	O	**48**	DBG_RXD	I
49	RI	O	**50**	DBG_TXD	O
51	AGND		**52**	AGND	
53	SPK1P	O	**54**	MIC1P	I
55	SPK1N	O	**56**	MIC1N	I
57	SPK2P	O	**58**	MIC2P	I
59	SPK2N	O	**60**	MIC2N	I

Contact us:
Shanghai SIMCom Ltd.
Add: SIM Technology Building, No. 700, Yishan Road, Shanghai,P. R. China 200233
Tel: +86 21 5427 8900
Fax: +86 21 5427 6035
URL: www.sim.com

SIMCOM CONFIDENTIAL FILE